ICONX



ICON X & Utility

i20X-i40X-i40FX-i60LX
i20sX - i20uX - i20uX-F

USER MANUAL

8/26/2026

THANK YOU & WELCOME TO OUR ICON FAMILY!

Thank you for purchasing our ICON X Model. Before you drive the vehicle, please read this Owner's Guide. This guide contains maintenance and operation information. The illustrations can show items that are optional for your vehicle.

You can do most of the service procedures in this guide with common automotive hand tools. If necessary, contact your service representative for information about how to service the vehicle as shown in the Periodic Service Schedule.

Repair or replacement parts are available from your Service Parts Department. When you contact about service or parts for your vehicle, the information below is needed.

Vehicle Model: _____

PIN, VIN or Serial Number: _____



Protect Your Investment



PRIVACY.FLOWCODE.COM

Scan To Register Your Warranty or Visit: iconev.com/warranty/

Read all of this manual to become thoroughly familiar with this vehicle. Particularly important information is emphasized in this manual.

The use of non Original Equipment Manufacturer (OEM) approved parts may void the warranty.

Tampering with or adjusting the governor to permit vehicle to operate at above factory specifications will void the vehicle warranty.

USER'S MANUAL OF ELECTRIC POWERED VEHICLES ICON X i20X,i40X,i40FX,i60LX,i20sX, i20uX,i20uX-F



1. For safety and compliance, this Low-Speed Vehicle (LSV) must only be driven by a licensed driver. Additionally, having a supervising adult present is strongly recommended to help prevent hazards and ensure safe operation.
2. The accelerator pedal and the brake pedal cannot be pressed at the same time, otherwise the control system will be damaged and the motor will burn out!
When the vehicle starts, the parking brake must be released. Otherwise, the brake system may cause permanent damage and damage other parts!
3. Vehicle Modifications Prohibited. Unauthorized modifications can compromise vehicle performance, safety, and durability. Such modifications will void your manufacturer's warranty and may violate federal or state regulations.
4. The improper installation of aftermarket electrical equipment (such as alarm systems or communication devices) could interfere with the vehicle's electronic control systems and adversely affect vehicle safety or performance. It is strongly recommended to consult your authorized dealer before installing any such equipment.
5. Due to ongoing product enhancements, the information in this manual may differ from the product you purchased and is subject to change without notice.
6. This product is a dedicated motor vehicle in the specific area (factory) specified in the Special Equipment Safety Supervision Regulations!It is strictly forbidden to drive after drinking. It is strictly prohibited to overload!

California Proposition 65

Warning: Operating, servicing and maintaining a passenger vehicle or off-highway motor vehicle can expose you to chemicals including engine exhaust, carbon monoxide, phthalates, and lead, which are known to the State of California to cause cancer and birth defects or other reproductive harm. To minimize exposure, avoid breathing exhaust, do not idle the engine except as necessary, service your vehicle in a well-ventilated area and wear gloves or wash your hands frequently when servicing your vehicle. For more information go to www.P65Warnings.ca.gov/passenger-vehicle.

Warning: Battery posts, terminals and related accessories contain lead and lead compounds, a chemical known to the State of California to cause cancer and reproductive harm. Wash your hands after handling.

TABLE OF CONTENTS

SAFETY INFORMATION

Important Safety Information 1
Vehicle Safety Labels 2
Battery Safety Information 10
Safety Practices 11

VEHICLE SERIAL NUMBER LOCATION

Vehicle Serial & VIN Number 12

VEHICLE FEATURES

Vehicle Overview 13

OPERATION AND CONTROLS

Pre-Operation Safety And Performance Inspection 24
Remove The Seat 27

TOUCHSCREEN MANUAL

Touchscreen Overview 28

PKE HARNESS LESS KEYLESS START SYSTEM

PKE Harness less keyless start system 40

TABLE OF CONTENTS

BATTERY CHARGER

Charger Specification 42

WHEELS & TIRES 45

LIFT AND LOWER THE VEHICLE 46

VEHICLE MAINTENANCE

Vehicle Scheduled Maintenance Chart 47

Camber Calibration Instruction 49

Chassis Maintenance 52

Vehicle Maintenance 53

Vehicle Transportation And Towing 55

Guidelines for Using the Electromagnetic Parking Brake Handle 56

Vehicle General Specification 57

MAINTENANCE LOG 64

SAFETY INFORMATION

Observe these NOTICES, CAUTIONS, WARNINGS and DANGERS; be aware that servicing a vehicle requires mechanical skill and a regard for conditions that could be hazardous.Improper service or repair may damage the vehicle or render it unsafe.

Replace missing, damaged or unreadable safety decals immediately to prevent possible property damage, personal injury, or death. Purchase replacement safety decals from your dealer or distributor.

Know and understand the laws and regulations for vehicle operations in your area. For any questions on material contained in this manual, contact an authorized representativefor clarification.

The components of the Save LIVES package are:
Safe vehicles play a critical role in averting crashes and reducing the likelihood of serious injury.

Speed management, Leadership, Infrastructure design, Vehicle safety standards, Enforcement of traffic laws and Survival after a crash.

IMPORTANT SAFETY INFORMATION

	The safety alert symbol is used to alert you for possible personal injury hazards. Obey all safetyregulations that follow this symbol to preventpossible injuries or death.
	A DANGER label identifies hazardous situations which may cause death or serious injuries.
	A WARNING label identifies hazardous situations which may cause death or serious injuries.
	A CAUTION label identifies hazardous situations which may cause minor or moderate injuries.
	A NOTICE label identifies hazardous situationswhich may cause property damages.

SAFETY INFORMATION

Prior to performing any procedure, you must thoroughly review all applicable safety information.

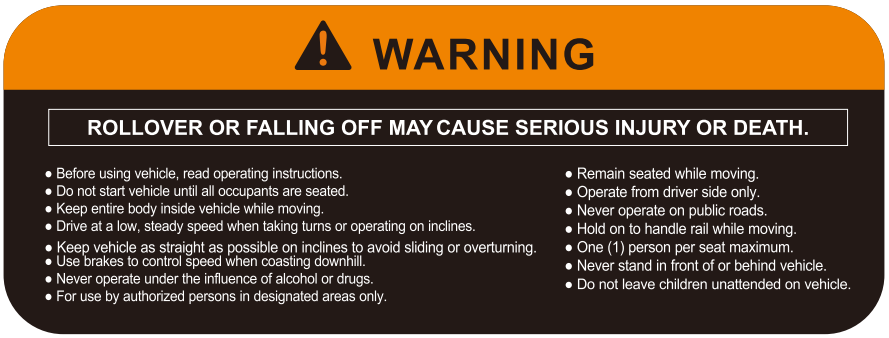

OPERATOR WARNING DECAL



WINDSHIELD WARNING DECAL(L)



WINDSHIELD WARNING DECAL(R)



PINCH POINTS WARNING DECAL

SAFETY INFORMATION

Prior to performing any procedure, you must thoroughly review all applicable safety information.

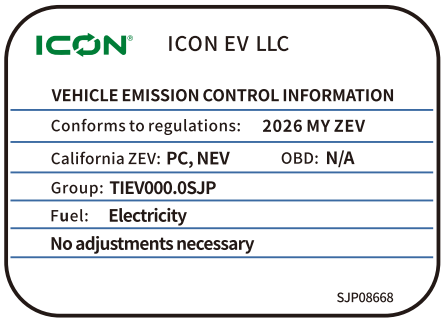

VECI (VEHICLE EMISSION CONTROL INFORMATION) LABEL



HIGH-VOLTAGE SERVICE WARNING LABEL



CHARGING STAND WARNING DECAL

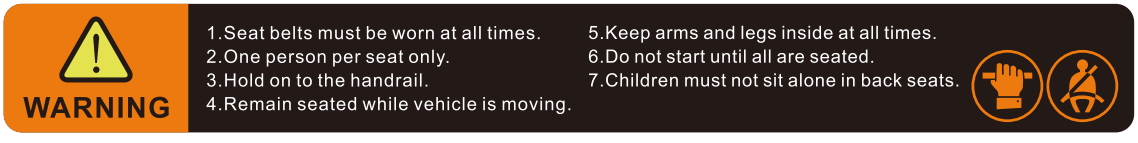

REAR SEAT OCCUPANT WARNING DECAL

SAFETY INFORMATION

Prior to performing any procedure, you must thoroughly review all applicable safety information.



ASSIST HANDLE - LOAD CAPACITY WARNING LABEL

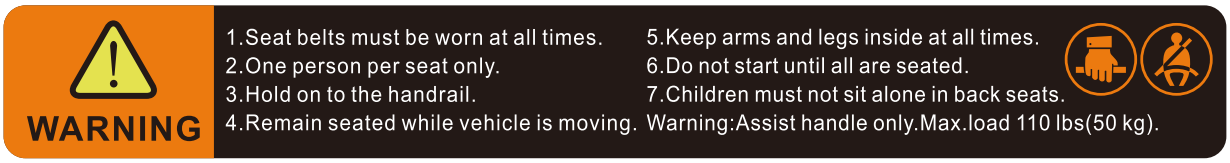

PASSENGER SAFETY INSTRUCTIONS WITH HANDRAIL SPECIFICATION DECAL



LOAD RATING LABEL/DECAL

SAFETY INFORMATION

Prior to performing any procedure, you must thoroughly review all applicable safety information.



WARNING

ROLLOVER OR FALLING OFF MAY CAUSE SERIOUS INJURY OR DEATH.

- Before using vehicle, read operating instructions.
- Do not start vehicle until all occupants are seated.
- Keep entire body inside vehicle while moving.
- Drive at a low, steady speed when taking turns or operating on inclines.
- Keep vehicle as straight as possible on inclines to avoid sliding or overturning.
- Use brakes to control speed when coasting downhill.
- Never operate under the influence of alcohol or drugs.
- For use by authorized persons in designated areas only.
- Remain seated while moving.
- Operate from driver side only.
- Never operate on public roads.
- Hold on to handle rail while moving.
- One (1) person per seat maximum.
- Never stand in front of or behind vehicle.
- Do not leave children unattended on vehicle.

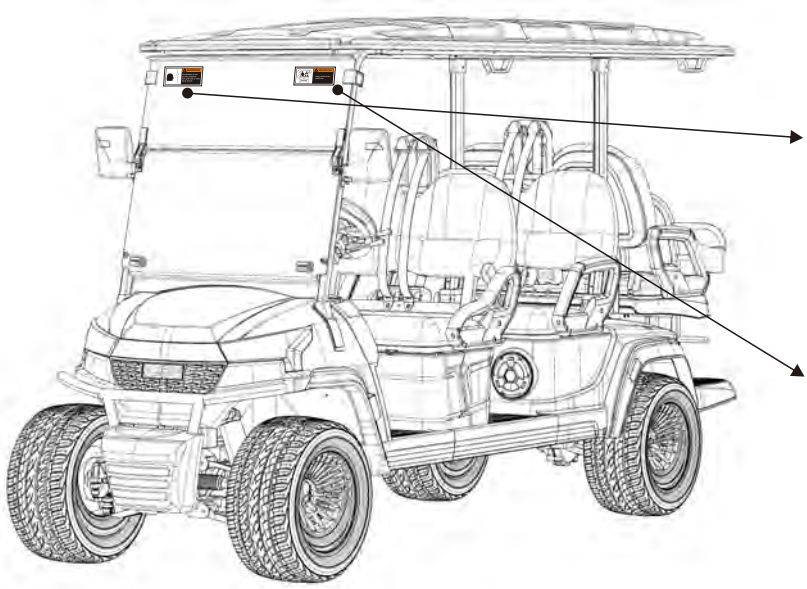



WINDSHIELD WARNING DECAL(L)



WINDSHIELD WARNING DECAL(R)

SAFETY INFORMATION

Prior to performing any procedure, you must thoroughly review all applicable safety information.



HIGH-VOLTAGE SERVICE WARNING LABEL

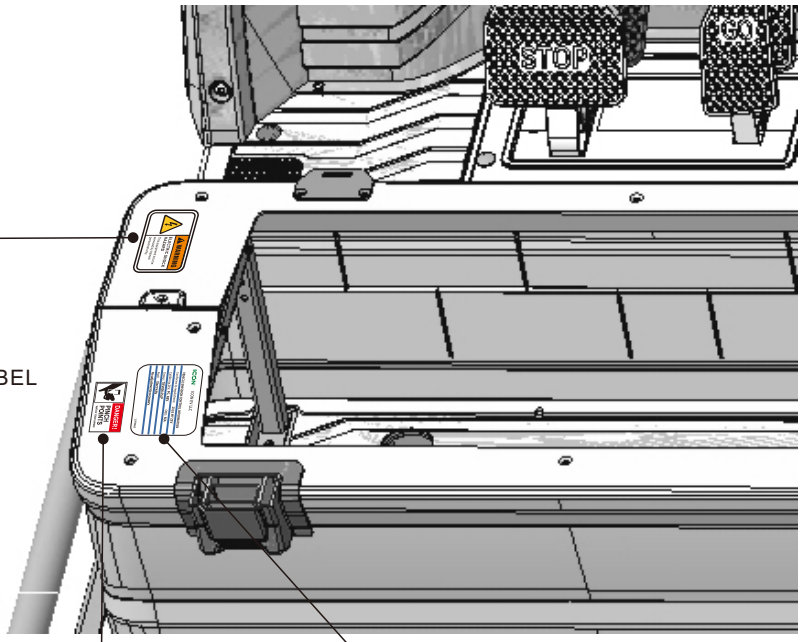



PINCH POINTS WARNING DECAL

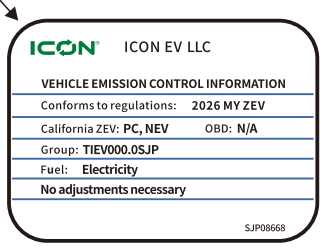

VECI (VEHICLE EMISSION CONTROL INFORMATION) LABEL

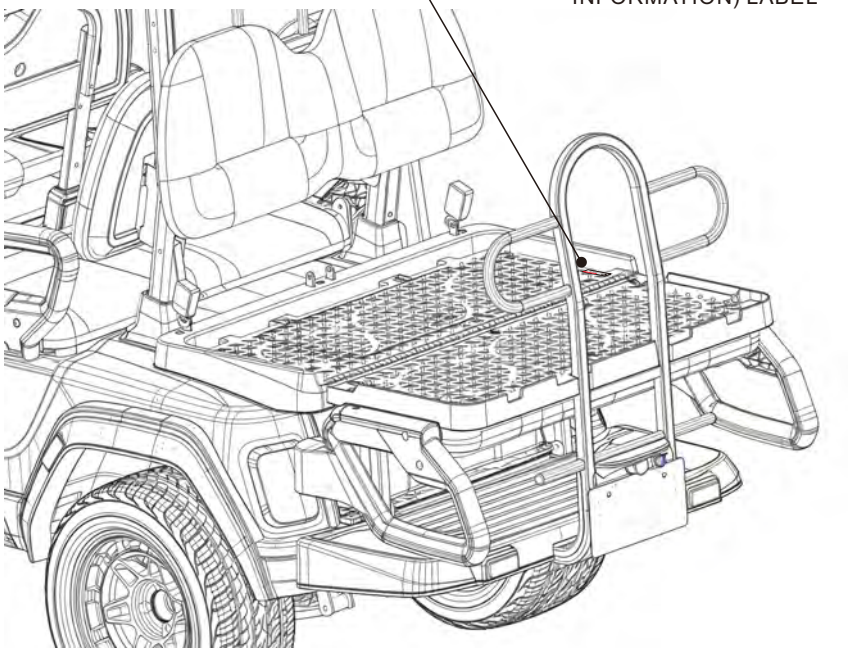

i40X、i60LX

SAFETY INFORMATION

Prior to performing any procedure, you must thoroughly review all applicable safety information.

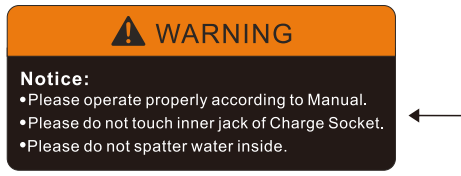

CHARGING STAND WARNING DECAL

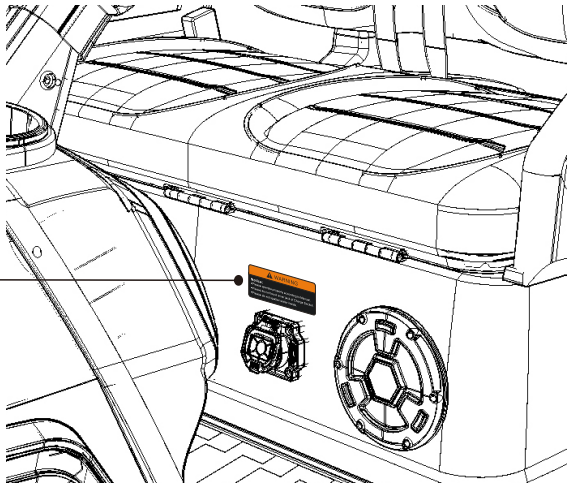

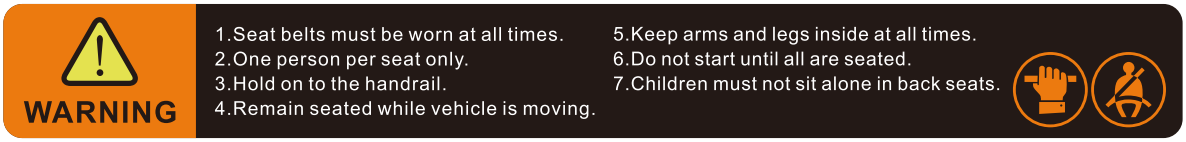

REAR SEAT OCCUPANT WARNING DECAL

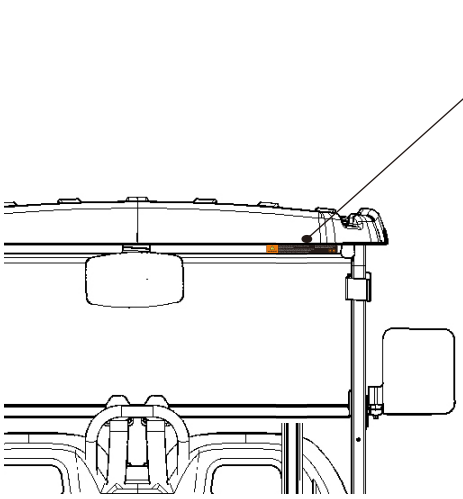



i40X、i40FX、i60LX

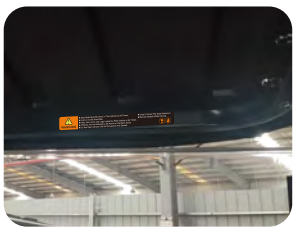

i20X、i20sX、i20uX、i20uX-F



i40X、i40FX、i60LX

SAFETY INFORMATION

Prior to performing any procedure, you must thoroughly review all applicable safety information.



ASSIST HANDLE - LOAD CAPACITY WARNING LABEL



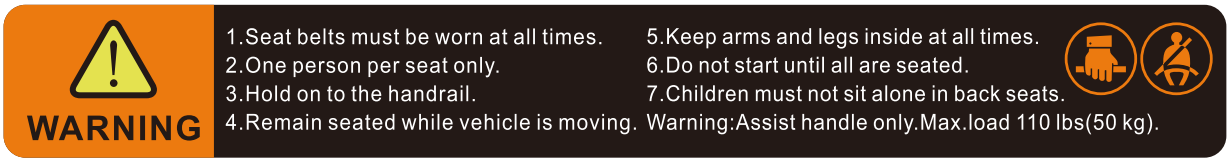

PASSENGER SAFETY INSTRUCTIONS WITH HANDRAIL SPECIFICATION DECAL



i40X、i60LX

SAFETY INFORMATION

Prior to performing any procedure, you must thoroughly review all applicable safety information.

⚠ WARNING

Total platform capacity: 374 lbs
Fixed platform capacity: 264 lbs
Flip platform capacity: 110 lbs
Rear deck capacity: 374 lbs
Seat capacity: 374 lbs

LOAD RATING LABEL/DECAL

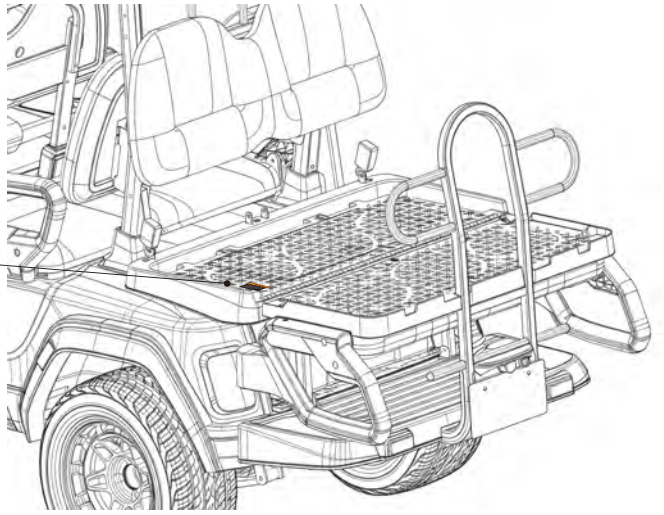

i40X、i60LX

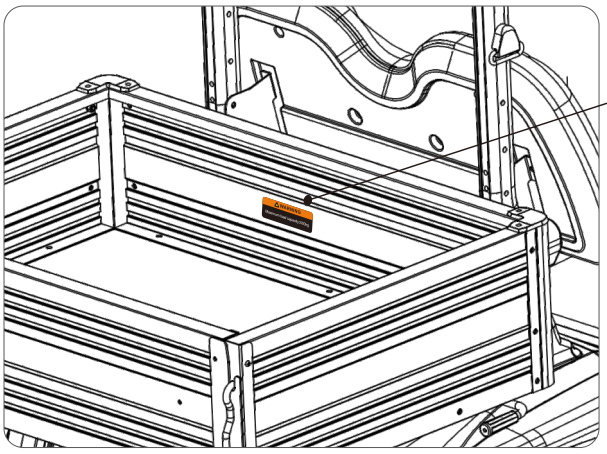

i20sX

⚠ WARNING

Maximum load capacity: 150kg

⚠ WARNING

Maximum load capacity: 500kg

LOAD CAPACITY LABEL

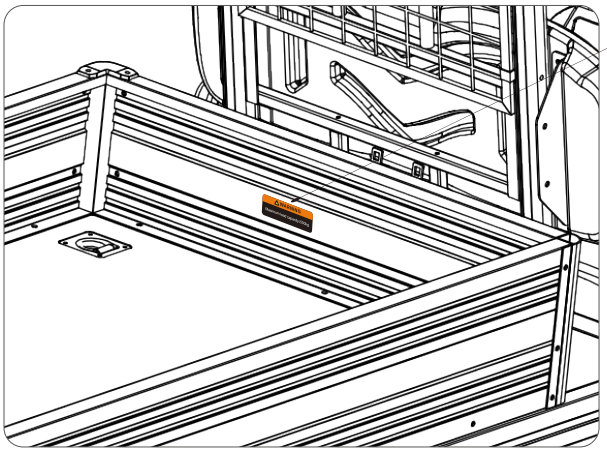

i20uX

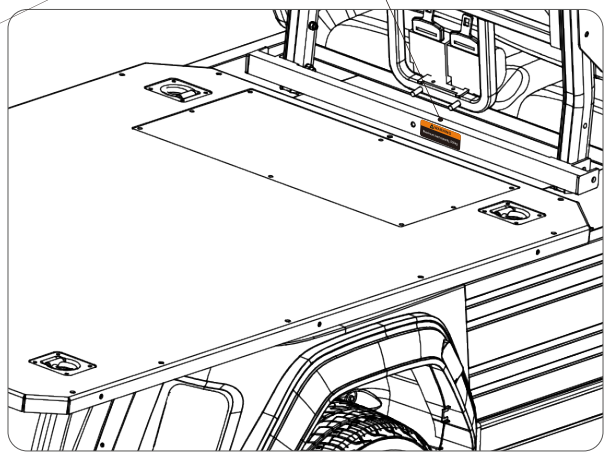

i20uX-F

SAFETY INFORMATION

Prior to performing any procedure, you must thoroughly review all applicable safety information.

BATTERY SAFETY INFORMATION

Safety and warning labels are on the lithium battery for your protection. Read and comply with the instructions on the labels for avoiding the potential risks or injuries. if any labels shown below is damaged ,comes off or becomes illegible, contact your ICON dealers for replacements.

	While working on a li-ion battery wear protective eyeglasses and clothing
	Explosion and fire hazard. The terminals of a li-ion battery are always live, therefore do not place metallic items or tools on top of a li-ion battery. Avoid short circuits.
	Explosion and fire hazard. The terminals of a li-ion battery are always live, therefore do not place metallic items or tools on top of a li-ion battery. Avoid short circuits.
	Batteries must not be mixed with domestic or industrial waste .
	Do not open or dismantle the battery. Electrolyte is very corrosive. If the battery casing is damaged do not touch the exposed electrolyte or powder because it is corrosive.
	Do not touch any electrical components without any insulation protection.
	Batteries marked with the recycling symbol must be processed via a recognized recycling agency.
	Observe these instructions and keep them located near the battery for future. Read, understand and comply with all warning and instructions.

SAFETY INFORMATION

Prior to performing any procedure, you must thoroughly review all applicable safety information.

OPERATING THIS VEHICLE IMPROPERLY CAN RESULT IN COLLISION, LOSS OF CONTROL, OR ROLLOVER, CAUSING SEVERE INJURY OR DEATH.

To ensure safe operation:

1. Read and understand all warnings, labels, and instructions in this owner's manual before use.
2. Always follow the operating procedures and safety guidelines provided.
3. All operators and passengers must comply with these safety rules.
4. All passengers should be seated and seat belted for on road use.

A. General Safety Practices

- Operate the vehicle responsibly to ensure the safety of the driver, passengers, and others in the vicinity.
- Keep the vehicle in safe operating condition at all times.
- The driver must keep both hands on the steering wheel and both feet on the floor or pedals while in motion.

B. Pre-Operation & Post-Accident Inspection

- Inspect the vehicle before each use to confirm it is in safe operating condition. Perform the daily inspection outlined in this manual.
- If the vehicle is involved in any accident, it must be inspected by an authorized dealer before being used again.
- Remove the key when the vehicle is unattended to prevent accidental starting or unauthorized use.

C. Speed, Terrain & Hill Operation

- Drive at safe speeds appropriate for the terrain, visibility, and weather conditions.
- Do not drive on excessively steep slopes. Always assess the terrain before descending.
- Drive straight up or down hills—never drive across a slope. Use the brake gradually to control speed and maintain steering control. Sudden braking or sharp turns may cause loss of control.

D. Passenger Safety & Legal Compliance

- All passengers must be seated before the vehicle is moved.
- This vehicle is not to be operated by minors.
- Operate only in approved areas and obey all applicable local safety rules.
- Ensure the use of this low-speed vehicle complies with all local, state, and federal regulations.

Be familiar with vehicle features before attempting any operations.

VEHICLE SERIAL NUMBERS

The product serial number for this vehicle is permanently displayed on a black aluminum plate located beneath the center dashboard console. This plate is clearly marked with the unique serial number assigned by ICON Electric Vehicles, accompanied by a scannable QR code. This serial number serves as the official product identifier, allowing full traceability to the vehicle's complete records, specifications,and configuration within ICON's database.

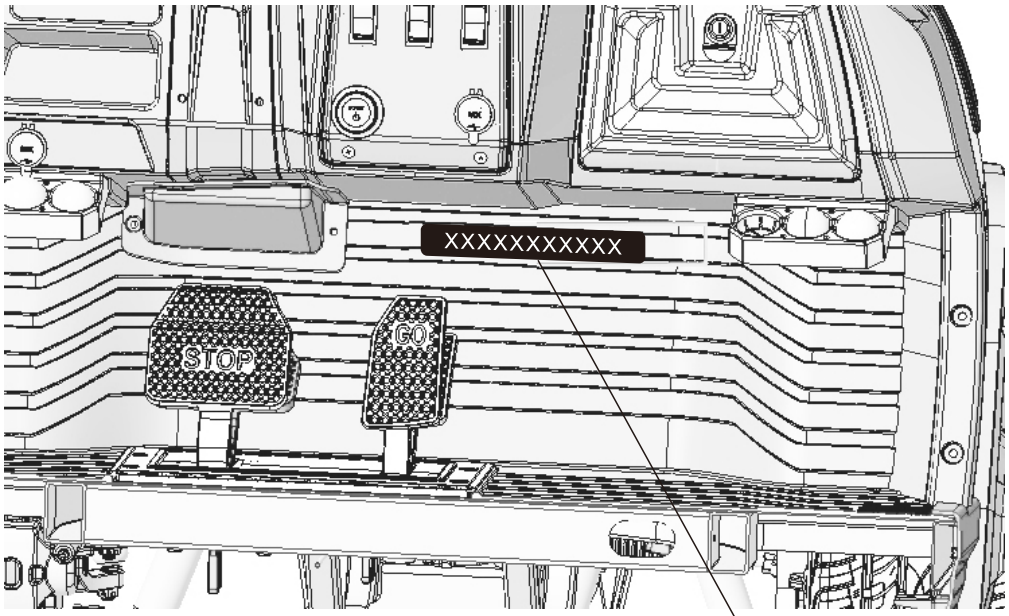

XXXXXXXXXXX

Serial Number

From the point of sale onward, ICON Corporation uses this serial number to track the vehicle's service history, support warranty administration, and validate authenticity throughout its operational life. This serial number is essential for processing warranty claims and obtaining approved parts and service. Customers should take note of this identifier and keep it accessible for all ownership-related and support purposes.

VEHICLE FEATURES

Be familiar with vehicle features before attempting any operations.

Vehicle dimensions (All dimensions in millimeter)

i20X

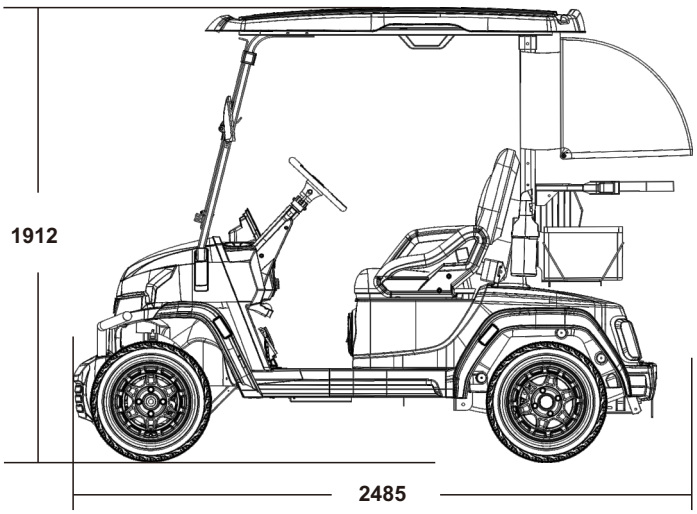

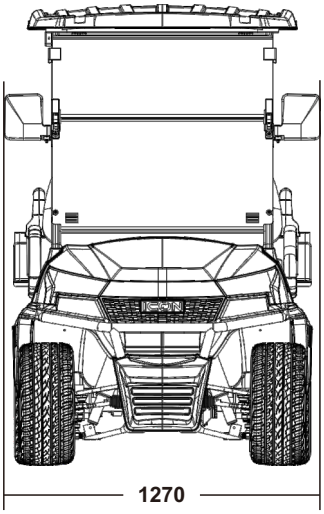

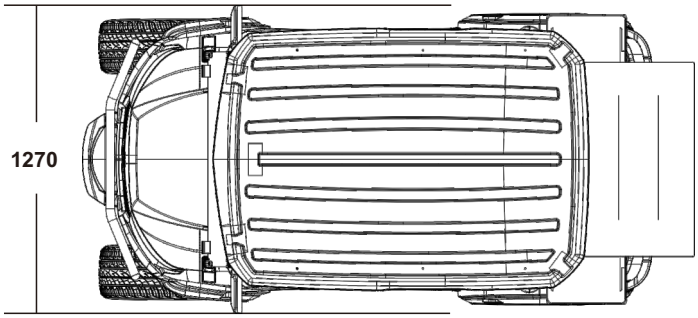

Overall Dimensions (L×W×H)	2485*1270*1912 mm
Gross Weight	1063.18 lbs

VEHICLE FEATURES

Be familiar with vehicle features before attempting any operations.

Vehicle dimensions (All dimensions in millimeter)

i40X

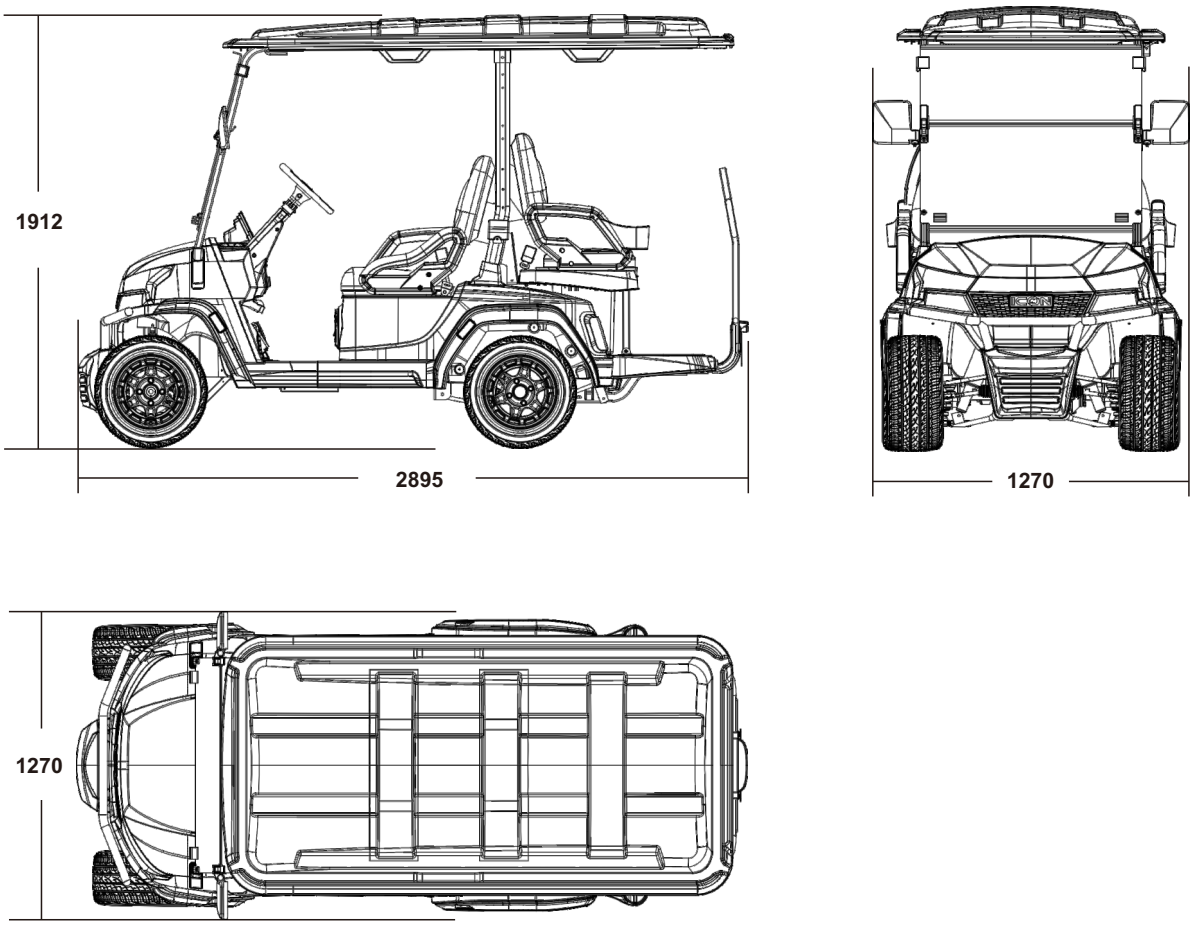

Overall Dimensions (L×W×H)	2895*1270*1912 mm
Gross Weight	1224.12 lbs

VEHICLE FEATURES

Be familiar with vehicle features before attempting any operations.

Vehicle dimensions (All dimensions in millimeter)

i40FX

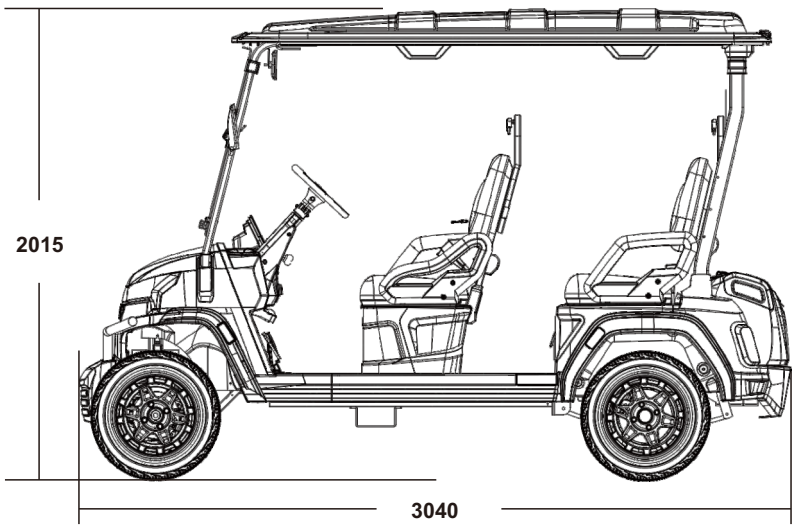

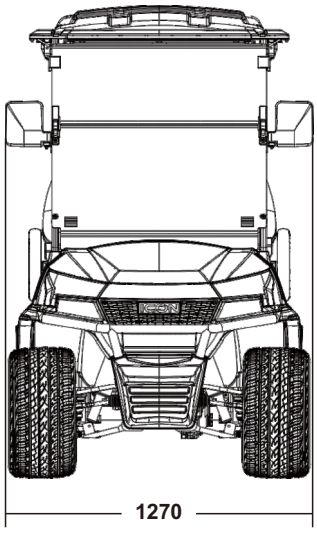

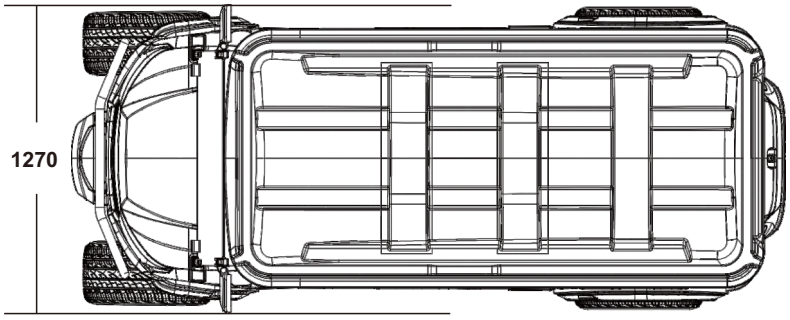

Overall Dimensions (L×W×H)	3040*1270*2015 mm
Gross Weight	1259.39 lbs

VEHICLE FEATURES

Be familiar with vehicle features before attempting any operations.

Vehicle dimensions (All dimensions in millimeter)

i60LX

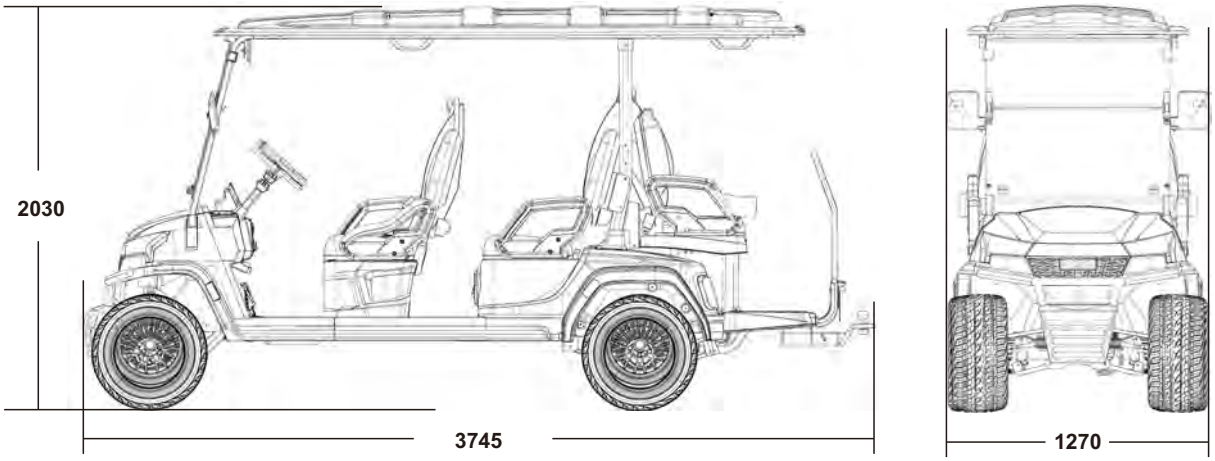

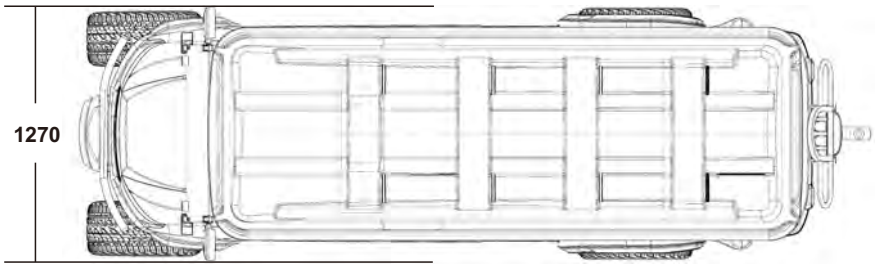

Overall Dimensions (L×W×H)	3745*1270*2030 mm
Gross Weight	1430.25 lbs

VEHICLE FEATURES

Be familiar with vehicle features before attempting any operations.

Vehicle dimensions (All dimensions in millimeter)

i20sX

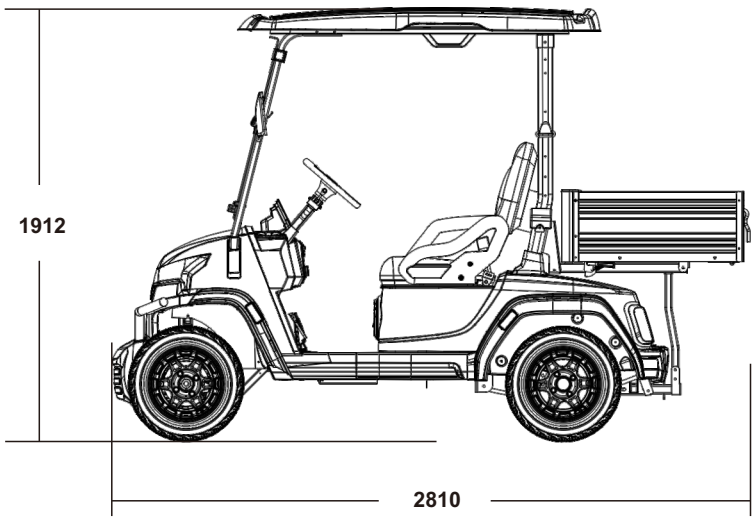

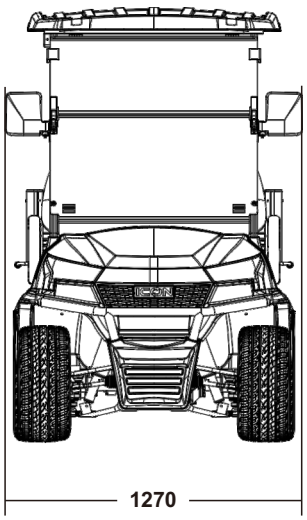

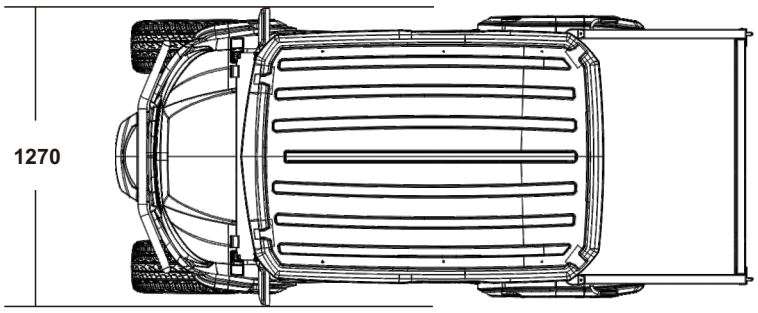

Overall Dimensions (L×W×H)	2810*1270*1912 mm
Gross Weight	1153.78 lbs

VEHICLE FEATURES

Be familiar with vehicle features before attempting any operations.

Vehicle dimensions (All dimensions in millimeter)

i20uX

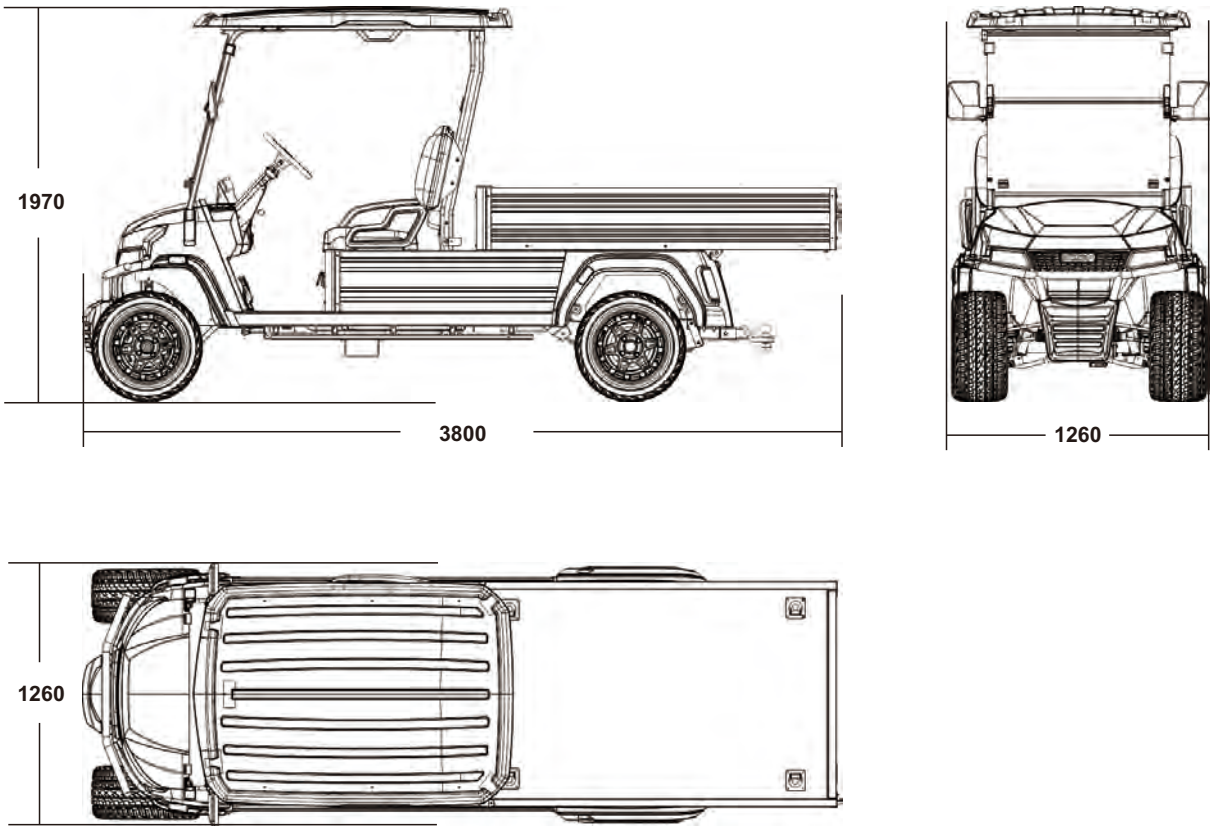

Overall Dimensions (L×W×H)	3800×1260×1970 mm
Gross Weight	1428.59 lbs

VEHICLE FEATURES

Be familiar with vehicle features before attempting any operations.

Vehicle dimensions (All dimensions in millimeter)

i20uX-F

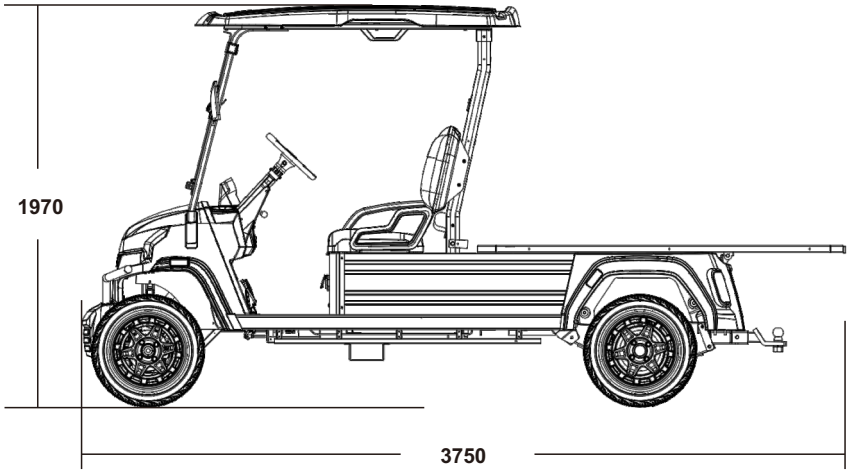

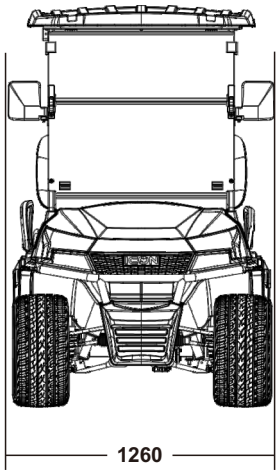

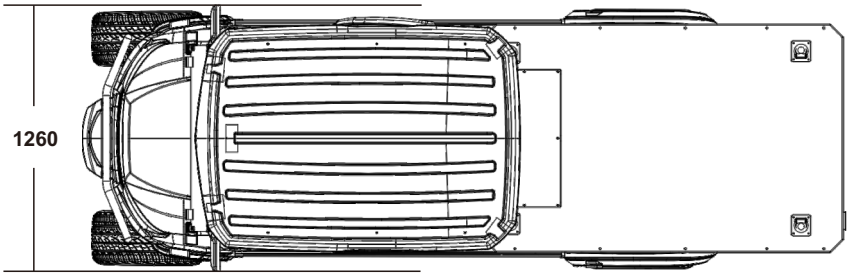

Overall Dimensions (L×W×H)	3750×1260×1970 mm
Gross Weight	1399.94 lbs

VEHICLE FEATURES

Be familiar with vehicle features before attempting any operations.

- This model is a forward-facing four-seater with a standard floor-to-ground clearance: 485mm (using 23*10.5-14 street tires).
  For non-lifted configurations, it uses 20*9-12 tires with a floor-to-ground clearance:440mm.
  If customers require further lowering, we can achieve a floor-to-ground clearance at:
  400mm with the current 20*9-12 tire configuration by adjusting the spindle mounting holes and rear leaf spring mounting holes. This adjustment is recommended to be performed by a dealer.
- The entire body cover is manufactured using injection molding technology, with six standard color options.
- It features four-wheel disc brakes with electromagnetic parking brake.

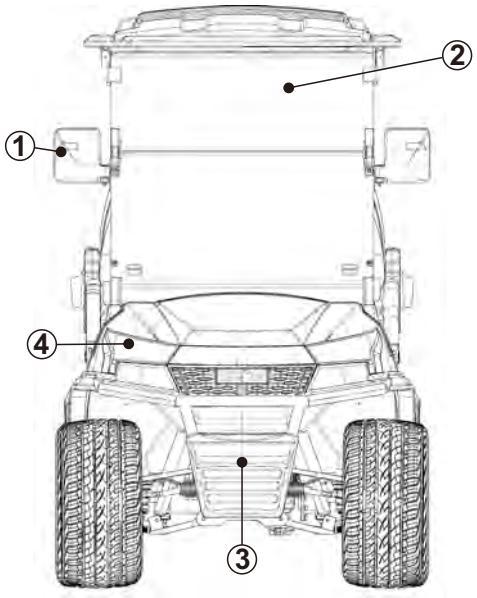

① REAR VIEW MIRRORS WITH TURN SIGNAL INDICATORS
② INTEGRATED WINDSCREEN
③ FRONT GUARD
④ HEADLIGHTS

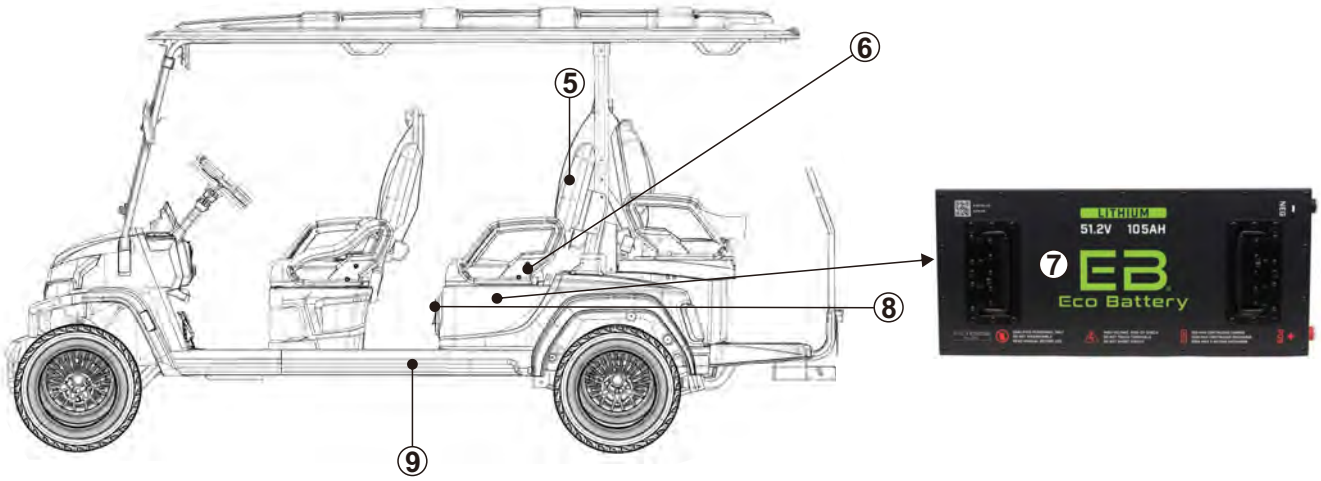

⑤ LUXURY SEAT WITH ARMREST
⑥ 3-POINT SEAT BELTS FOR EACH SEATS
⑦ LITHIUM BATTERY PACK
⑧ 20A ON-BOARD CHARGER
⑨ AUTOMOTIVE E-COAT CHASSIS

VEHICLE FEATURES

i20X i40X i40FX i60LX i20sX

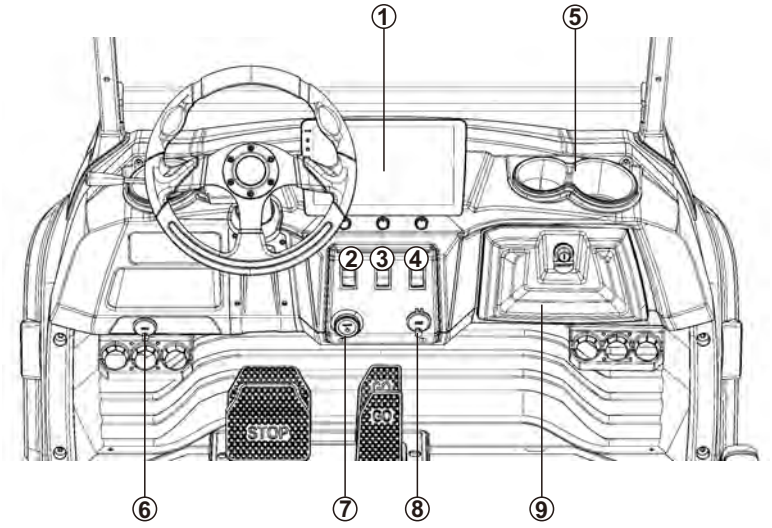

① 10.1 INCH MULTI-FUNCTIONAL TOUCHSCREEN
② FORWARD / BACKWARD
③ HEADLIGHT SWITCH
④ HAZARD LIGHTS SWITCH
⑤ CUP HOLDERS
⑥ USB PORT
⑦ POWER BUTTON
⑧ USB PORT
⑨ GLOVE BOX WITH LOCKS

i20uX&i20uX-F

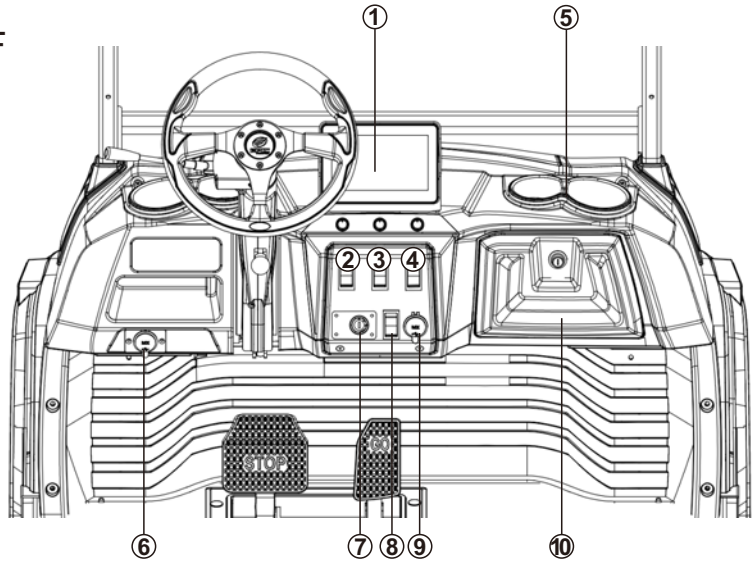

① 10.1 INCH MULTI-FUNCTIONAL TOUCHSCREEN
② FORWARD / BACKWARD
③ HEADLIGHT SWITCH
④ HAZARD LIGHTS SWITCH
⑤ CUP HOLDERS
⑥ USB PORT
⑦ KEY-OPERATED ELECTRONIC LOCK
⑧ CARGO BED LIFT BUTTON
⑨ USB PORT
⑩ GLOVE BOX WITH LOCKS

VEHICLE FEATURES

12V Pre-Wired Accessory Switches

The three rocker switches on the instrument panel control dedicated 12V pre-wired circuits for user-installed accessories. From left to right:

THREE ROCKER SWITCHES ARE FOR
12V PRE - WIRED FOR ACCESSORIES

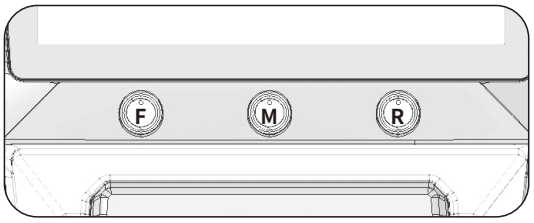

1. Front Compartment Accessory Lead
   The first switch controls a 12V power lead positioned under the front cowl. This lead is intended for accessories mounted at the front of the vehicle, such as a light bar.

2. Seat Base Accessory Lead
   The second switch activates a 12V power lead located inside the seat bucket. The lead is secured to the seat bucket support bracket with a cable tie, providing power for accessories installed in the center console area.

3. Rear Bumper Accessory Lead
   The third switch operates a 12V power lead accessible under the rear bumper. The lead is secured to the rear frame support bracket with a cable tie, allowing for easy installation of accessories at the rear of the vehicle.

Note: All pre-wired leads are activated when the corresponding rocker switch is turned on.



① REVERSE SEAT ARMREST
② REVERSE SEATS
③ TAILLIGHTS
④ BACKUP CAMERA
⑤ AUTOMOTIVE STYLE REAR BUMPER

OPERATION AND CONTROLS

Be familiar with vehicle features before attempting any operations.

DANGER

OPERATING THE VEHICLE WHILE OCCUPANTS ARE NOT FULLY SEATED CAN CAUSE SERIOUS PERSONAL INJURY OR DEATH. START THE VEHICLE ONLY WHEN ALL OCCUPANTS ARE FULLY SEATED.
FALLING OBJECTS CAN CAUSE PROPERTY DAMAGE, SERIOUS PERSONAL INJURY, OR DEATH.
DO NOT OPERATE THE VEHICLE WHERE THERE IS A RISK OF FALLING OBJECTS. DO NOT LET A PASSENGER HOLD A CHILD ON THEIR LAP WHILE THE VEHICLE IS IN OPERATION.DO NOT LET PASSENGERS RIDE IN THE VEHICLE OR TRAILER BEING TOWED.

WARNING

KEEP AWAY FROM DROP-OFFS, STEEP SLOPES, AND UNSTABLE SURFACES.
SUDDEN STARTS, STOPS, AND TURNS CAN CAUSE PROPERTY DAMAGE AND SERIOUS PERSONAL INJURY. PREVENT SUDDEN STARTS, STOPS, AND TURNS. FAILURE TO CORRECTLY MAINTAIN THE VEHICLE AND MAKE NECESSARY REPAIRS CAN DECREASE VEHICLE PERFORMANCE, CAUSE A FIRE, PROPERTY DAMAGE, SERIOUS PERSONAL INJURY,OR DEATH. IF PROBLEMS ARE FOUND DURING SCHEDULED INSPECTION OR SERVICE,OPERATE THE VEHICLE ONLY WHEN REPAIRS ARE MADE.
MAKE SURE THAT ALL PASSENGERS CAN SECURE THEMSELVES IN THE VEHICLE BEFORE VEHICLE OPERATION. TO PREVENT SERIOUS PERSONAL INJURY, KEEP ENTIRE BODY IN THE VEHICLE DURING OPERATION.
THE VEHICLE IS NOT SPECIALLY EQUIPPED FOR HANDICAPPED PERSONS.
BEFORE VEHICLE OPERATION, MAKE SURE THAT ALL PERSONS COMPLY WITH THE WARNINGS AND OPERATING INSTRUCTIONS. INCORRECT OPERATION OF THE VEHICLE CAN CAUSE DECREASED VEHICLE PERFORMANCE, PROPERTY DAMAGE, SERIOUS PERSONAL INJURY, OR DEATH.
TO PREVENT FALLS FROM THE VEHICLE, PASSENGERS MUST STAY SEATED AND ALWAYS HOLD ON TO HAND HOLDS OR HANDRAILS WHEN THE VEHICLE IS IN OPERATION. THE DRIVER MUST KEEP BOTH HANDS ON THE STEERING WHEEL WHEN THE VEHICLE IS IN OPERATION.
A SHARP TURN AT HIGH SPEEDS CAN CAUSE A ROLL-OVER, FALL, PROPERTY DAMAGE, AND SERIOUS PERSONAL INJURY. OPERATE THE VEHICLE SLOWLY IN TURNS. UNINTENDED VEHICLE OPERATION CAN CAUSE SERIOUS PERSONAL INJURY OR DEATH.
BEFORE LEAVING THE VEHICLE OR DURING VEHICLE MAINTENANCE, DISABLE THE VEHICLE.
THE VEHICLE IS NOT DESIGNED TO MEET CHILD SAFETY SEAT COMPATIBILITY REQUIREMENTS. CHILDREN REQUIRING A CHILD SAFETY SEAT MUST NOT RIDE ON THE VEHICLE. COMPLY WITH STATE AND LOCAL LAWS PERTAINING TO CHILD SAFETY.

CAUTION

OPERATE THE VEHICLE ONLY FROM THE DRIVERS SEAT.
OPERATE THE VEHICLE ONLY IN SPECIFIED AREAS.
ONLY AN AUTHORIZED LICENSED DRIVER CAN OPERATE THE VEHICLE.
ONLY OPERATE THE VEHICLE IN COMPLIANCE WITH LOCAL AND STATE LAWS.
USE CAUTION WHEN OPERATING THE VEHICLE IN THE PRESENCE OF HIGHER-SPEED VEHICLES, IN CONGESTED AREAS, OR ON UNIMPROVED SURFACES.

OPERATION AND CONTROLS

Be familiar with vehicle features before attempting any operations.

PRE-OPERATION SAFETY AND PERFORMACE INSPECTION

To ensure safety and optimal performance, a thorough pre-operation inspection must be conducted before each use. If any irregular condition is identified, cease operation immediately. Operating a vehicle with known defects may lead to accelerated component wear, system failure, or serious personal injury. For all maintenance and repair needs, contact an authorized EPIC dealer.

INSPECTION ITEMS	INSPECTION PROCEDURES
Battery	Prior to operation, verify the battery pack is fully charged.
System	Inspect terminals for tight, clean connections free of corrosion. Ensure the battery compartment is clean, dry, and unobstructed.
Braking System	Depress the brake pedal. It should engage smoothly with firm resistance and return promptly to its full upright position upon release without sticking or dragging.
Accelerator Pedal	Press and release the accelerator pedal. It must operate smoothly without binding and return completely to the idle position by its own tension.
Tires & Wheels	**1. Inflation Pressure:** • For 23x10.5R14 tires: Maintain 30 psi. • For 20x9-12 tires: Maintain 40 psi. **2. Visual Inspection:** Check tread and sidewalls for cuts, cracks, abnormal wear, or embedded debris. Ensure lug nuts are properly torqued.
Steering System	With the vehicle stationary, gently rotate the steering wheel left and right to check for excessive free play or unusual noises. Firmly grasp the wheel and attempt to move it vertically to confirm secure mounting.
Reverse Warning Buzzer	Shift the Forward/Reverse selector to the R (Reverse) position. A distinct, continuous audible tone must be emitted from the warning buzzer.
Lighting System	Functionally test all lights in sequence: headlights, taillights, brake lights, turn signals, and marker lights. Confirm all are operational and of correct intensity.
Digital Instrument Cluster	With the vehicle powered on but not in motion, inspect the 10-inch touchscreen instrument panel. Verify that the screen illuminates properly, clearly displays key information (including speed, state of charge, gear position, etc.), and that all touch controls are responsive.

This checklist is part of the official owner's manual. Always refer to the latest version of the manual for the most up-to-date safety and operating information.

OPERATION AND CONTROLS

Be familiar with vehicle features before attempting any operations.

PRE-OPERATION SAFETY AND PERFORMACE INSPECTION

Before initiate using vehicle, the batteries should be fully charged.

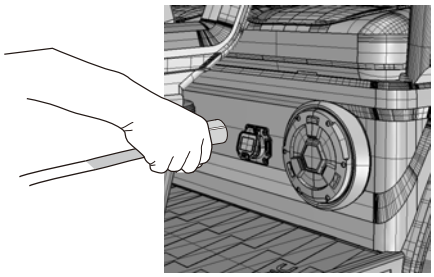

Check the accelerator pedal ,when stepped and released it should returns to its original position with full flexibility.

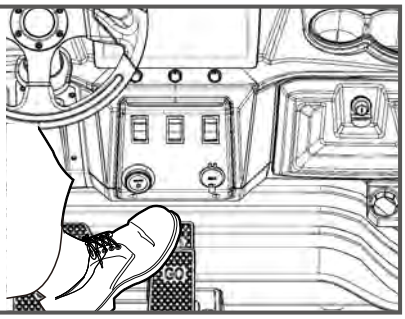

Check the brake pedal , when stepped it should be flexible and feels firm . And it returns to its original position with flexibility when released.

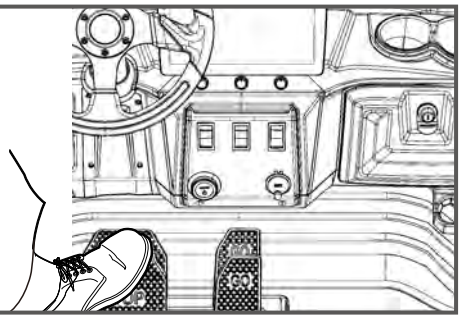

Check the tires' pressure, it should be inflated until the internal pressure is around 40PSI(i20X) 30PSI(i40X/i60LX)

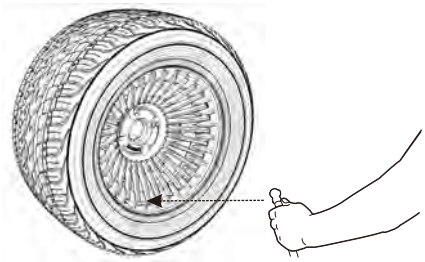

Check the signal lights , the brake lights and turning lights should be in proper working condition.

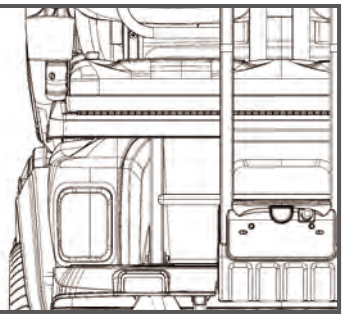

OPERATION AND CONTROLS

Be familiar with vehicle features before attempting any operations.

PRE-OPERATION SAFETY AND PERFORMACE INSPECTION

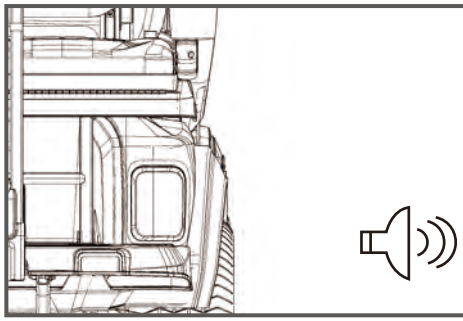

Check the reverse beeper ,when the direction selecting switch be set at “REV”, it should beep soundly.

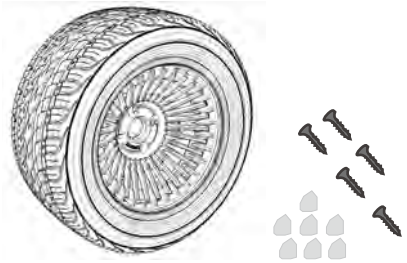

Check the tires’ surface , remove any embedded objects you can find.Be sure no cracks or other damages to the tires ,defective tires may cause accident while driving.

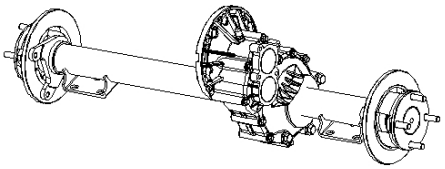

Check the lubricant capacity the rear axle contains, use a cleaned stick , stick it into the rear axle and reach the bottom , pull it out check the depth. The amount of oil should be around 650ml.

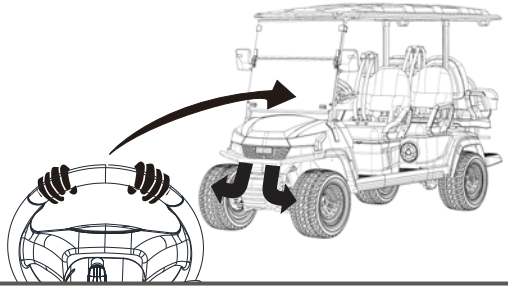

Pull the steering wheel up and down, check the tightness of steering wheel. Rotate the steering wheel right and left. Be sure no excessive free play or rattling sound.



Check the tightness of the battery cables, make sure all the nuts are solidly tight. Loose nuts on the battery will cause sparks while operating.

Be familiar with vehicle features before attempting any operations.

REMOVING AND REINSTALLING THE SEAT:

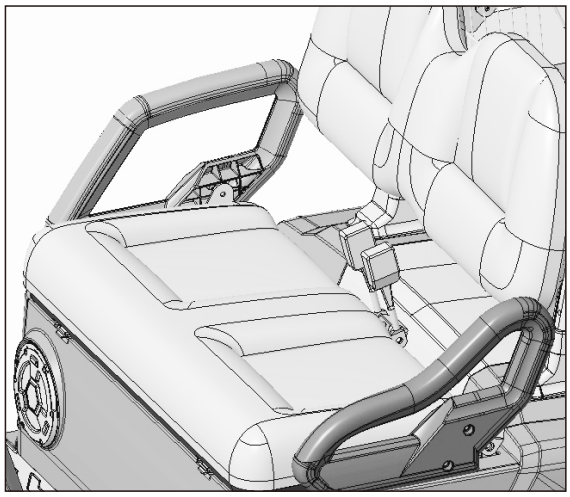

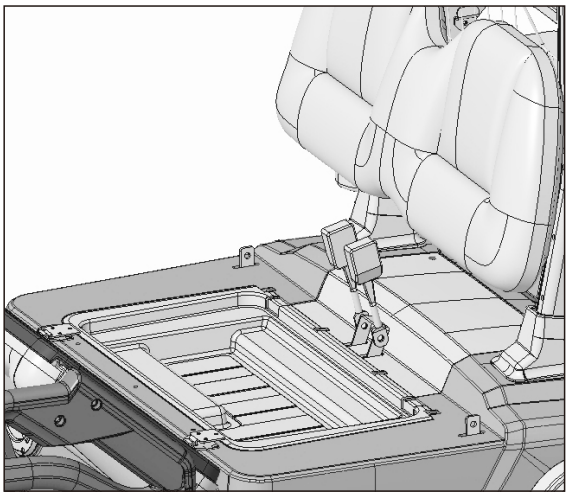

1. Locate the two hinges at the front of the seat.
2. To remove the seat:
   - Lift the seat from the rear, as the front is secured by hinges.
   - Lift the seat to a certain angle.
   - Slowly pull the seat upwards to separate the male and female ends of the hinges.
   - Note: This action can be done by one person if they have enough strength. If not, it is recommended to have two people to avoid scratching the seat bucket.
3. To reinstall the seat:
   - Align the hinges first.
   - Insert the hinges back in place.
   - Ensure the seat is properly installed and test it after installation.

TOUCHSCREEN MANUAL

Be familiar with vehicle features before attempting any operations.

10.1 inches Speedometer

This product is a 10.1-inch multimedia speedometer for vehicles, featuring dynamic data display and multimedia playback capabilities.
The speedometer uses the CAN bus to communicate directly with the controller and the Battery Management System (BMS). It can also collect and control data from peripheral equipment, displaying it on the screen after comprehensive calculations.
It features full-screen touch control, with blue backlit buttons on the left side for quick operation.
The external USB port supports multimedia playback and various audio and video formats, such as MP3, MP4, MKV, and AVI files.
Bluetooth connectivity allows for music playback and phone call answering via a mobile phone.
The integrated FM radio module, using the included external antenna, can automatically search for radio stations and store up to 40 presets.Antenna may need to relocated to higher position for best signal.

Security Information

1. Ensure the electrical wiring strictly follows the wiring diagram, paying special attention to the polarity and verifying the voltage of the electrical system.
2. If the fault alarm indicator on the speedometer lights up, stop immediately and check the issue.
3. Do not use the multimedia system while driving.
4. Avoid working with live electricity during disassembly to prevent damage to the speedometer and other components. Best to pot cart in two modes to work on electrical repairs.

Home page



TOUCHSCREEN MANUAL

Be familiar with vehicle features before attempting any operations.

Home page function instructions:



1. 18 Volume Icon: Displays the real-time volume level.

2.USB Display: The USB icon will not be displayed if no USB is inserted; it will be displayed when a USB is inserted .

3.Bluetooth Icon: The icon is gray when not connected and blue when connected.

4.Brightness Adjustment: Can switch between full brightness and half brightness .

5.Return Key: Press this in other interfaces to gradually return to the home page.

6.Lithium Battery Status: BMS The icon will be highlighted when in lithium battery status. Clicking this icon will display relevant lithium battery information. The icon will turn red if there is a lithium battery fault.

7. Left Turn Indicator: Flashes when the left turn signal or hazard lights are on.

Be familiar with vehicle features before attempting any operations.

8.  High Beam Indicator: Displays when the high beams are on (optional feature, not used in some vehicles).

9.  Low Beam Indicator: Displays when the low beams are on (optional feature, not used in some vehicles).

10.  Fault Indicator Light: Lights up when there is a vehicle fault. Clicking the icon will display specific fault information.

11. 

READY Indicator Light: Lights up when the vehicle is fault-free and turns off when there is a fault or the vehicle speed exceeds 2 KM/H.

12.  Small light indication is displayed when the small light is turned on (optional function, some vehicles do not use this function)

13.  Right Turn Indicator: Flashes when the right turn signal or hazard lights are on.

14.  Brake Fault Indicator: Lights up when there is no oil in the reservoir (optional feature, not used in some vehicles).

15.Gear Indicator: Displays 

Gear Indicator: Displays 

when in drive; displays 

or enters the reverse camera interface when in reverse; displays 

when in Sports gear.

16. Speed Dynamic Bar: Dynamically displays according to speed changes.

17. Speed Value Display: Displays the real-time speed value.

18. Voltage Dynamic Bar: Dynamically displays according to voltage changes.

19. Voltage Value Display: Displays the real-time voltage value.

20.  Parking Indicator: Displays when the foot parking brake is engaged (optional feature, not used in some vehicles).

21. 

Battery Level Indicator: Turns yellow when the battery level is ≤20%; turns red when the battery level is ≤10%.

22. 

Current Indicator: Displays the real-time current value.

23.Charging Prompt: Does not display when the battery level is >20%; lights up when the battery level is ≤20%  ; lights up and flashes when the battery level is ≤10%,  indicating urgent need for charging.

24. 

Trip Odometer Display.

25. 

Total Odometer Display.

TOUCHSCREEN MANUAL

Be familiar with vehicle features before attempting any operations.

Button definitions:



1.Mute button: Press this button, the mute icon will be displayed in the volume area. At this time, the speedo is in mute state. Press the increase or decrease volume icon to release the mute mode.

2.Home key: Press this button in other interfaces such as radio, Bluetooth, settings, etc. to directly return to the home page, such as playing radio, music, and Bluetooth. Pressing this button supports background playback.

3.Backspace: Press this when in other interfaces, and it will gradually return to the home page.

4.Volume+: Press this to increase the volume. The maximum volume is 30

5.Volume-: Press this to reduce the volume. The minimum volume is 0

Be familiar with vehicle features before attempting any operations.

Multimedia


CarPlay


BT Music


Telephone


USB Music


USB Movie


Setting


FM

- **Smart Link**



After successfully connecting to an iPhone, it can mirror some applications on the phone, such as phone, music, maps, etc., which can be operated through the instrument screen.

TOUCHSCREEN MANUAL

Be familiar with vehicle features before attempting any operations.

- **Bluetooth music**



Bluetooth Icon: Turns blue when connected, and gray when not connected.

Pause/Play: Click here to play or pause the phone's Bluetooth music.

Previous Track:
Click here to play the previous track on the phone.

Next Track:
Click here to play the next track on the phone.

Connected Device:
When the phone's Bluetooth is successfully connected to the speedometer, the name of the connected device, such as “iPhone,” will be displayed here. This name could be the device model or a custom name set by the phone.

Bluetooth Name: The Bluetooth name of the device. The phone or other instruments can search for this Bluetooth name to connect and pair. This is a crucial step in the process of connecting the phone to the speedometer's Bluetooth. The correct name must be searched to pair successfully, and different instruments have different names.

TOUCHSCREEN MANUAL

Be familiar with vehicle features before attempting any operations.

• **Phone**



Digital display area:

1. When dialing a number, this area will display the number in real time, and the interface will display a dial icon as shown in the figure: Click this button to make a call, and the interface will display a hang-up icon after making a call. Click this icon to end the call.

2. Click this button to enter the call recording interface.

3. When you enter a wrong number, you can press the delete button to delete it.

4. Disconnect is used to disconnect phone that is connected.

Be familiar with vehicle features before attempting any operations.

- **Movie**



Movie:
Do not play while driving

Played time:
You can manually adjust the playback progress bar

Total time:
Show the total duration of the movie

Scale adjustment:
AUTO: AUTO standard mode
Full Screen Mode: Switch to this icon to enter full screen mode
1:1 mode: 1:1 switch to this icon to enter 1:1 mode
16:9 mode: 16:9 switch to this icon to enter 16:9 mode

Previous song: Click this icon to play the previous video
Next song: Click this icon to play the next video
Pause/Play: Click this icon to play the video or pause it
Movie Name/Format: When the video is playing, the current name and format of the video is shown here.

TOUCHSCREEN MANUAL

Be familiar with vehicle features before attempting any operations.

- **Music**

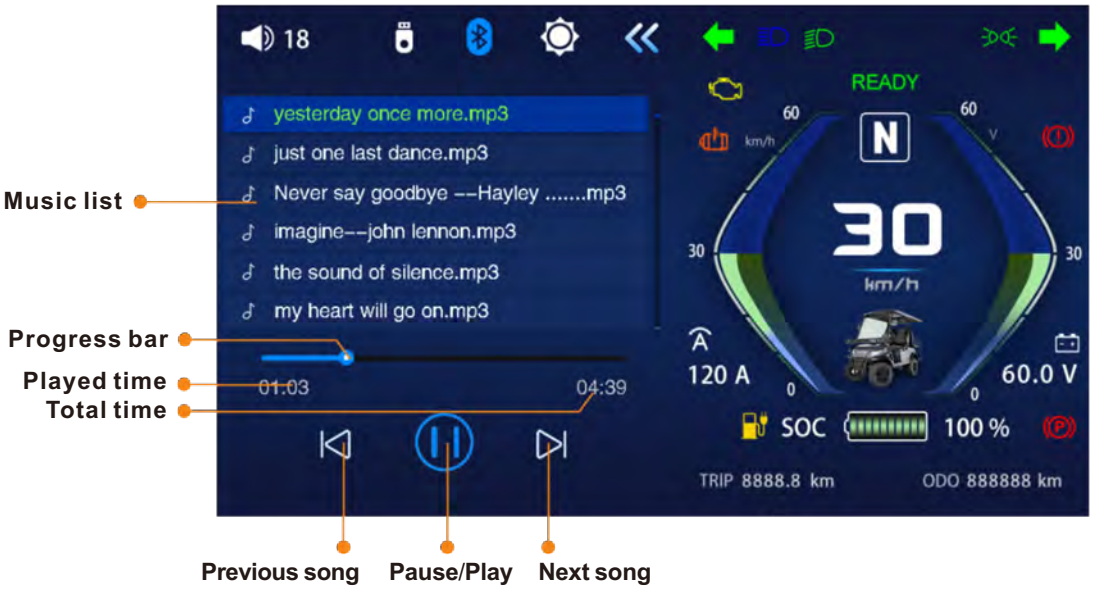

List of Song:
The music copied from Flash Disk(USB) is displayed in the list here, you can slide up and down to select the music, and the music will be played after selection

Played time:
You can manually adjust the playback progress bar to choose to play

Total time:
Show the total duration of the music

Previous song: Click this icon to play the previous song
Next song: Click this icon to play the next song
Pause/Play: Click this icon to play music or pause playback

TOUCHSCREEN MANUAL

Be familiar with vehicle features before attempting any operations.

- **Setting**

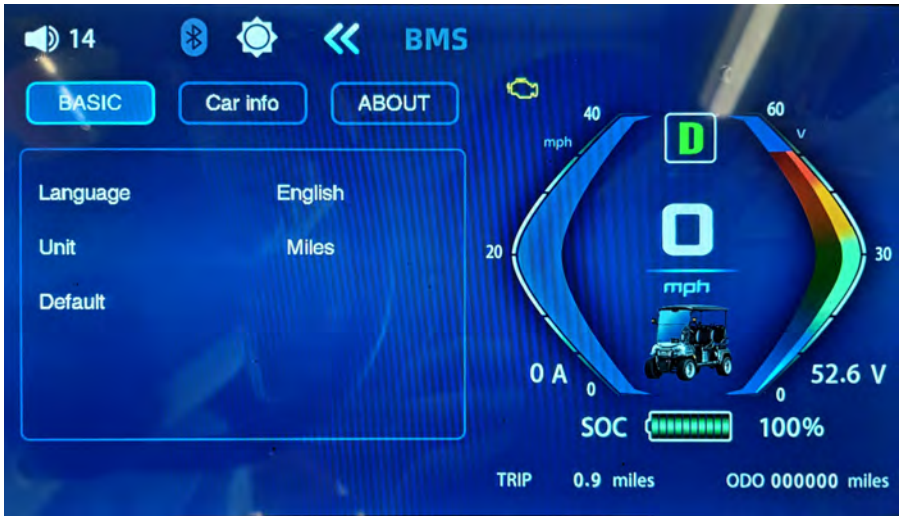

Basic settings:

Language: English/Chinese
Unit: Miles/Kilometers
Restore default settings: Click here to pop up a dialog box

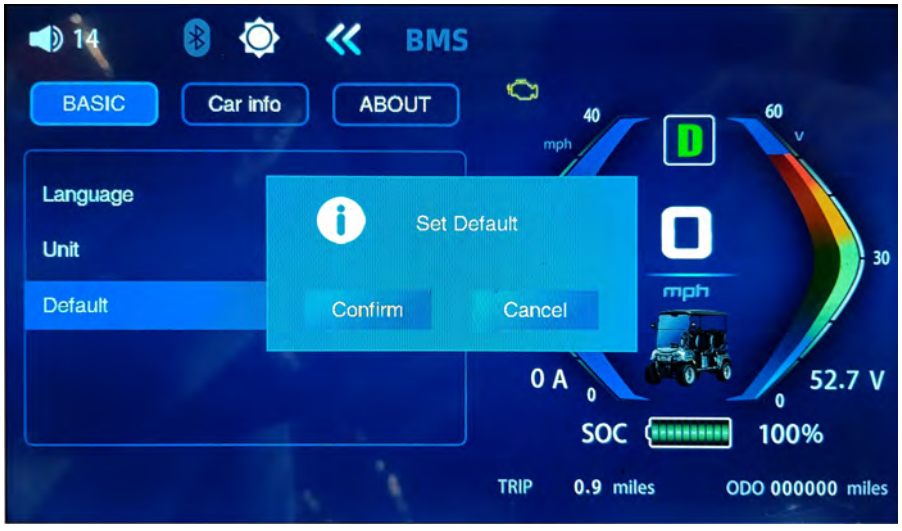

Click **Confirm** to restore the machine to its original upgraded state.
For example: setting English, kilometers and miles, volume, etc. will be restored to the original state. Clicking Cancel will give up the recovery.

TOUCHSCREEN MANUAL

Be familiar with vehicle features before attempting any operations.

Vehicle Information



Trip Odometer: The distance traveled by the carts. Click here to reset the trip odometer.
Motor Temperature: Displayed based on data transmitted by the controller.
Controller Temperature: Displayed based on data transmitted by the controller.

Version Display



Shows the current version number of the speedometer. Click here three times to view the main control version, microcontroller version, and Bluetooth version.

TOUCHSCREEN MANUAL

Be familiar with vehicle features before attempting any operations.

• **Radio**



Radio Search: After clicking the search icon , the instrument will automatically search for radio stations from 87.5 to 108.0 and store the frequencies locally for easy access and management by the user. Up to 40 radio stations can be stored and displayed in the radio area, with 6 stations per page.

Radio Selection: These two buttons can be used to select the previous or next page of preset radio stations.

Frequency Display: Displays the selected frequency in real-time.

Antenna: The Antenna is inside the dash area and may need to be moved to a higher position in certain areas.

BMS



In this interface, you can view relevant information about the lithium battery, including total battery voltage, battery current, battery SOC (State of Charge), highest single cell voltage, lowest single cell voltage, highest single cell temperature, lowest single cell temperature, fault information, number of charge and discharge cycles, and the number of times charging was not done in a timely manner.

PKE Harness less keyless start system

PRODUCT FUNCTION

•No harness 5557 port design

•PKE induction keyless start function

•Direction light flashing function

•Learning remote control

•remote control low power indicates product parameters

PRODUCT PARAMETERS

1. Basic parameters

(1) Operating frequency: 433.92MHz (frequency stabilization)
(2) Remote control distance: 50 meters (under open conditions, the remote control is 1.5 meters from the ground, the main engine is 1 meter from the ground)
(3) Working voltage range: 48V
(4) Static current: 10mA (test voltage 85V)
(5) Maximum continuous electric starting current: 5A
(6) Operating temperature range: -30 -80

2. PKE induction parameters

(1)induction frequency: 125KHz (automotive low-frequency induction)
(2)induction distance: 1.5 meters
(3)Induction direction: X,Y,Z three-axis induction

REMOTE CONTROL INSTRUCTION

Host function description

1. Vehicle starting and extinguishing

(1) Vehicle start:
1, carry the intelligent remote control near the vehicle (within 1 meter), click the one-button start button to release, the vehicle detects the existence of legal remote control, the direction light flashes twice, the vehicle starts.
(2)Vehicle shutdown:
1. When the vehicle is in the starting state, click the one-button start button to release, the direction light flashes, and the vehicle is turned off.

2.Smart remote control low battery warning

In the intelligent remote control launch or induction launch, if the remote control battery is low, the red LED light is shining, the remote control battery must be replaced at this time; If the power is sufficient, the blue LED lights shine.

3. 48V signal detection function (New function)

After the switch is opened, the host begins to detect the 48V signal line. If the voltage of the line is detected to be lower than 20V for 20 minutes, the switch is closed. During the period, the voltage is higher than 20V, the time is cleared.

4. Remote control pairing learning mode

1 Disconnect the vehicle battery B+ and wait 5 seconds.
2 Press and hold the "Start/Stop" button to switch on battery B+.
3 Release the one-key start button and press the one-key start button four times, the direction light flashes, and enter the learning mode.
4 Press the lock button of the smart remote control and the remote control within 5 seconds.
5 the remote control flashes 1 red light and the direction light flashes, indicating success in learning.

1.48v+ Input
2.48v- Input
4. Left turn
5. Right turn
6.48V+ Output
8.12V+ Input
10.48V+ Signal detection

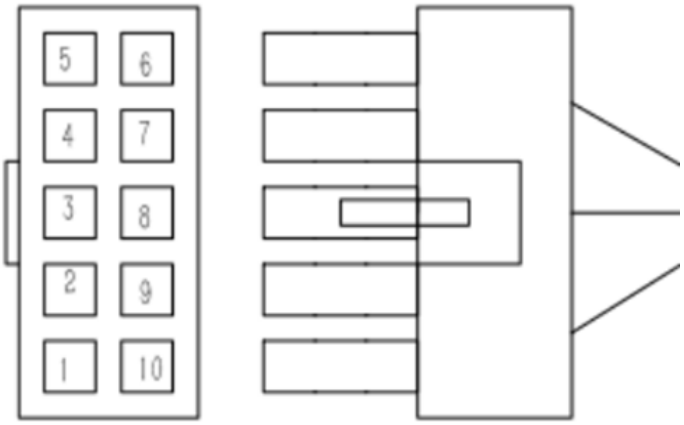

BATTERY CHARGER

Be familiar with vehicle features before attempting any operations.

⚠ WARNING

INCORRECT CONNECTION OF THE AC CORD CAN CAUSE A FIRE OR AN ELECTRICAL SHOCK. DO NOT USE AN ADAPTER TO CONNECT THE AC CORD INTO A TWO-PRONG POWER SOURCE. CONNECT THE AC CORD TO AN APPROVED POWER SOURCE. CONNECTION OF THE AC CORD TO AN INCORRECT RECEPTACLE CAN CAUSE A FIRE, ELECTRICAL SHOCK, PROPERTY DAMAGE, SERIOUS PERSONAL INJURY, OR DEATH. CONNECT THE AC CORD TO AN APPROVED POWER SOURCE AND RECEPTACLE. DO NOT LET THE BATTERY CHARGER BECOME WET. KEEP THE BATTERY CHARGER DRY.

CHARGER SPECIFICATION

Battery pack rated voltage Maximum charger ouput AC input voltage range AC input current value	51.2V 58.4V 100-240VAC, 50-60Hz 11.5A@120VAC, 6.1A@220VAC
Power factor Charger efficiency Noise IP Class Weight	0.99 95% 45dB IP67 9.3lb (4.2kg)
Operating temperature Storage temerature	-86

BATTERY CHARGER

Be familiar with vehicle features before attempting any operations.

HOW TO USE CHARGER

⚠ WARNING

TO DECREASE THE POSSIBILITY OF ELECTRICAL SHOCK OR ELECTROCUTION, MAKE SURE THE CHARGER PLUG IS NOT DAMAGED. THE POWER AC CORD HAS A PLUG WITH GROUND POST. DO NOT MOVE, CUT OR BEND THE GROUND POST.

1. Do not use extension cords
2. Inspect the charger cord to check if there is broken on damaged on the power AC cord and cable. Replace the broken AC power cord.
3. Plug the AC charge handle into the vehicle receptacle completely.
4. Plug the Power AC cord into the ground power completely.
5. The charger will automatically start in several seconds after plugging in the AC power cord.
6. The charger will automatically stop when the batteries are fully charged.
7. Remove the AC charge cord before operating the vehicle.

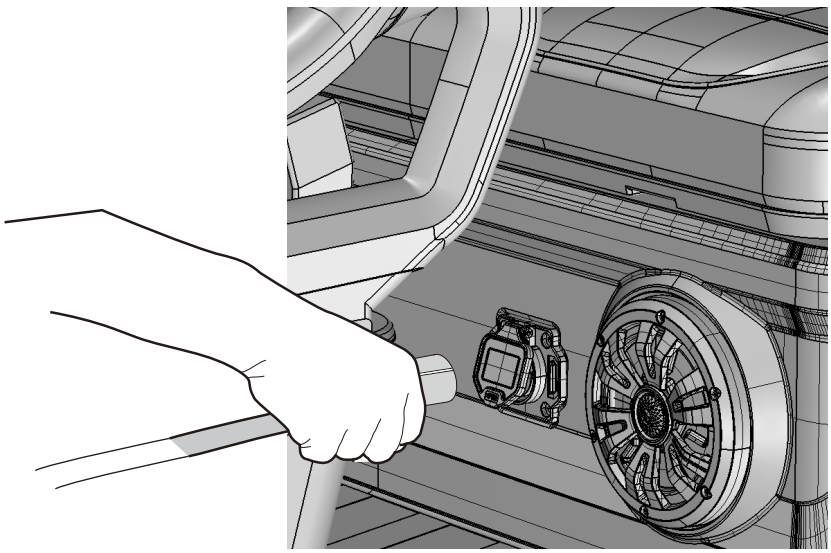

Be familiar with vehicle features before attempting any operations.

CHARGER MAINTENANCE

WARNING

IF THE PLUG PINS ARE BENT, SPEAK WITH YOUR LOCAL DEALER OR DISTRIBUTOR FOR REPLACING. DO NOT TRY TO REPAIR THE AC CORD PLUG OR PINS.

ELECTRICAL CORDS

Examine electrical cords for wear and damage before use. Immediately replace electrical cords for:

- Cracks
- Cuts
- Frayed wiring
- Insulation damage
- Loose connections
- Splices

Examine electrical plugs for wear and damage before use. Immediately replace electrical plugs for:

- Bent pins
- Corrosion
- Cracks
- Loose connections
- Missing pins

ELECTRICAL PLUGS AND RECEPTACLES

CLEAN THE ELECTRICAL PLUGS AND RECEPTACLES

1. Disconnect the AC cord from the power source.
2. Disconnect the AC cord from the battery charger.
3. Disconnect the DC cord from the vehicle charger receptacle.
4. Apply electrical contact cleaner to the electrical plugs and receptacles. Refer to the manufacturer instructions.
5. Clean the electrical plugs and receptacles.
6. Lightly lubricate the electrical plugs and receptacles with WD-40®.

Be familiar with vehicle features before attempting any operations.

WHEELS &TIRES

⚠ WARNING

DO NOT OVER INFLATE THE TIRES. EXCESS PRESSURE CAN CAUSE THE TIRE EXPLODE.
TO DECREASE THE RISK OF TIRE EXPLOSION, ADD SMALL AMOUNTS OF AIR TO THE TIRE AT INTERVALS TO SEAT THE TIRE BEADS. OVER INFLATION OF SMALL TIRES CAN OCCURS IN A FEW SECONDS.
PROTECT FACE AND EYES WHEN REMOVING THE TIRE VALVE CORE.
USE ONLY SOCKETS MADE FOR IMPACT WRENCHES TO DECREASE THE RISK OF INJURY CAUSED BY A BROKEN SOCKET.
DO NOT USE TIRES THAT HAVE INFLATION PRESSURE LESS THAN THE TIRE PRESSURE RECOMMENDED.

Always follow the cross-sequence pattern when you install the lug nuts to make sure the wheel is evenly seated against the hub.

NOTICE

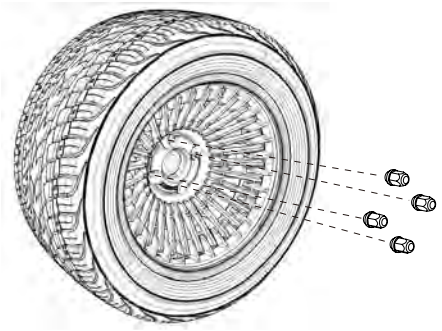

Tire Maintenance Tools & Procedures
Required Tools
- Lug Wrench, M12 – 1
- Impact Wrench – 1
- Impact Socket, M12 – 1
- Torque Wrench – 1

Inflation Pressure
- For 23x10.5R14 tires: Maintain 30 psi.
- For 20x9-12 tires: Maintain 40 psi.

Note: Tire pressure may be adjusted based on specific terrain or load conditions, but all four tires must maintain the same pressure for optimal handling and stability.
General Maintenance Guidelines
1.Always replace the valve stem cap after checking or adjusting tire pressure.
2.For minor punctures in the tread area, use a tire plug kit for repair.
3.If a tire has significant damage—such as a large hole, sidewall cut, or deep tear—replace the tire in its entirety.

Be familiar with vehicle features before attempting any operations.

LIFT AND LOWER THE VEHICLE

⚠ WARNING

LIFTING AND LOWER THE VEHICLE WITH CARGO CAN CAUSE PROPERTY DAMAGED, SERIOUS PERSONAL INJURY, OR DEATH. REMOVE ALL CARGO AND HAVE THE PERSON OUT FROM THE VEHICLE BEFORETHE VEHICLE IS LIFTED.

Steps For Lifting The Vehicle:

> Ensure the vehicle is powered down via the push-button start system before lowering it.
> Choose the jacks and jack stands rated for the vehicle.
> Engage the parking brake.
> Place the jack in the center of the lift point.
> Lift the front and rear of the vehicle.
> Put the Jack stands under the frame rails.
> Lower the vehicle onto the jack stands.

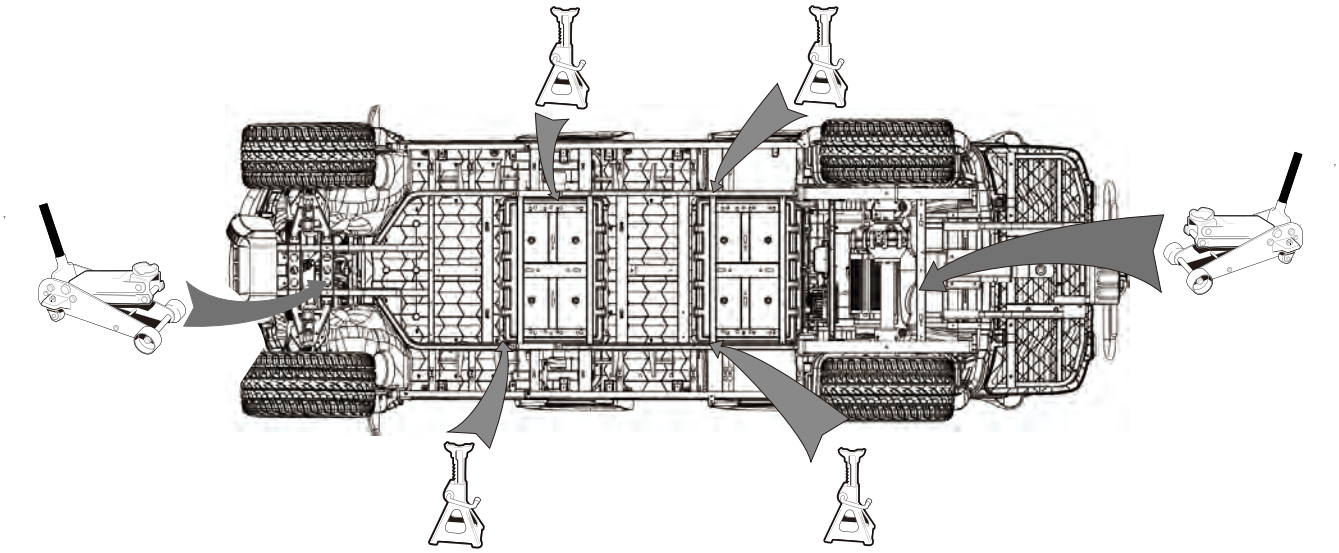

Steps For Lower The Vehicle:

> Before the vehicle is lowered, turn off key switch of the vehicle.
> Choose the jacks and jack stands rated for the vehicle.
> Place the jack in the center of the lift point.
> Lift the vehicle off from the jack stands.
> Remove the Jack stands under the frame rails.
> Lower the vehicle on the ground.
> Remove the Jacks.

Be familiar with vehicle features before attempting any operations.

VEHICLE MAINTENANCE

⚠ WARNING

VEHICLE SERVICE SAFETY WARNINGS

⚠ CRITICAL SAFETY RULES

1. ALWAYS DISABLE VEHICLE before any maintenance or when unattended.
2. QUALIFIED TECHNICIANS ONLY – all service requires electrical/mechanical expertise.
3. FOLLOW OFFICIAL PROCEDURES – use approved manuals for all repairs.

⊘ PROHIBITED ACTIONS

- Never service powertrain under load
- No loose clothing/jewelry during work
- Do not work under vehicle supported only by lifting device

SAFE LIFTING PROCEDURE

- Lift one end at a time
- Minimum 1,000 lb capacity equipment required
- Always use jack stands + chock grounded wheels

⚠ WIRING PRECAUTION

All wiring must be:

- Correctly routed
- Securely attached

Improper wiring can cause malfunction, fire, injury, or death.

Failure to follow these instructions may result in vehicle damage, fire, serious injury, or death.

SAFETY NOTICE

- Always wear safety glasses or approved eye protection when performing any service on the vehicle.
- Wear rubber gloves when working near or handling the battery.

VEHICLE MAINTENANCE

Be familiar with vehicle features before attempting any operations.

Regular Maintenance Checklist

Note: Be familiar with vehicle features before attempting any operations. Regular maintenance is required for the best performance and safe operation of the electric vehicle. Periodic maintenance must be performed accordingly.

Maintenance Frequency Legend
1D = Daily 1W = Weekly 1M = Monthly 1Q = Quarterly 6M-1Y = Every 6 Months to Annually
Maintenance Type Legend
Consumer User maintenance items for regular inspection and basic care
Dealer Professional maintenance items for qualified technicians

Maintenance Item	**Description**	1D Daily	1W Weekly	1M Monthly	1Q Quarterly	6M-1Y 6 Months to Annually
Battery System Maintenance						
Battery	Consumer Maintenance 1. Check for any damage to the battery surface.			✓		
	Consumer Maintenance 2. Charge the battery.	✓				
	Consumer Maintenance 3. Tighten the nut on the battery cable.			✓		
	Dealer Maintenance 4. Check the SOH (State of Health) of the battery.	✓				
	Dealer Maintenance 5. Clean the surface of the battery.				✓	
Charger Maintenance						
Charger	Consumer Maintenance 6. Observe the charging status; check if the charger plug becomes hot.	✓				
	Dealer Maintenance 7. Clean the surface of the charger. Do not let water enter the charger.					✓
Motor and Controller Maintenance						
Motor and Controller	Dealer Maintenance 8. Check whether all terminals are tightened properly (Turn o **ff**the power before inspection).					✓
	Dealer Maintenance 9. Clean the surface of the controller.					✓
	Dealer Maintenance 10. Check whether the solenoid is in order; inspect the contact point.					✓
	Dealer Maintenance 11. Check whether water has entered the motor.					✓
	Dealer Maintenance 12. Check whether all connectors for the motor & controller are tightened.					✓
	Dealer Maintenance 13. Check whether the accelerator pedal operates properly.					✓

Chassis and Body Maintenance						
Chassis and Body	Consumer Maintenance 14. Check tire pressure and tire surface condition.					✓
	Dealer Maintenance 15. Check whether the brake pedal is firm and releases freely.					✓
	Dealer Maintenance 16. Inspect the brake drum and brake shoe for replacement need.					✓
	Dealer Maintenance 17. Check the hand brake function.					✓
	Dealer Maintenance 18. Check the brake fluid reservoir level.					✓
	Dealer Maintenance 19. Check whether the shock absorber is leaking.					✓
	Dealer Maintenance 20. Fasten the shaft bolts.					✓
	Dealer Maintenance 21. Check whether the rear axle gearbox has sufficient oil.					✓
	Dealer Maintenance 22. Add grease to the front hub and steering gearbox.					✓
	Dealer Maintenance 23. Adjust the front and rear suspension.					✓
	Dealer Maintenance 24. Clean the body and seats.					✓

CAMBER CALIBRATION INSTRUCTION

(Dealer only)

1. Slowly drive the vehicle onto the test platform, align the vehicle straight, and turn off the electronic lock. Turn the steering wheel fully to the left and then to the right, then return the steering wheel to the center position. Press the brake pedal to check the firmness of the brake pedal (Do not drive onto the platform at high speed to avoid the risk of the vehicle falling off the platform due to delayed braking).

2. Check and confirm the tire pressure of all four tires (approximately 35 PSI). If the pressure exceeds this value, adjust it accordingly. If the pressure is insufficient, inflate the tires to the correct level.

3. As shown in Figures 1, 2, and 3, adjust the inclinometer to 53mm at the top and 50mm at the bottom, ensuring the height is flush with the aluminum rim. Bring the inclinometer close to the rim. If there is a gap between the measuring ruler and the rim, adjust the lower control arm's adjustment bolt accordingly.







Be familiar with vehicle features before attempting any operations.

As shown in Figures 4 and 5, loosen the lock nut on the lower control arm adjustment bolt and the ball joint lock nut. Adjust the lock nuts relative to the gap between the upper and lower rims. After adjustment, the rim should just make contact with the inclinometer. Turn the steering wheel two full turns; if the camber does not change, tighten the lock nuts and mark them.

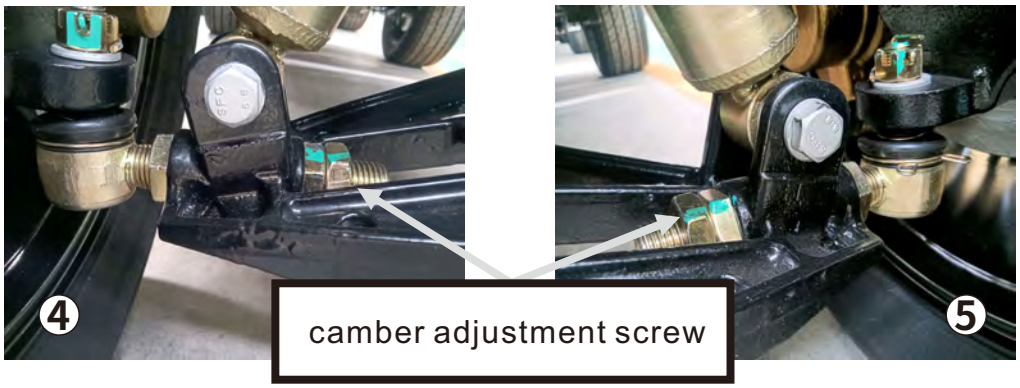

Refer to Figures 6, 7, 8, and 9. Use a tape measure to measure the distance from the center point of the tire to the centerline. Work with a partner and use a green marker to make paint marks. Adjust the toe alignment accordingly.



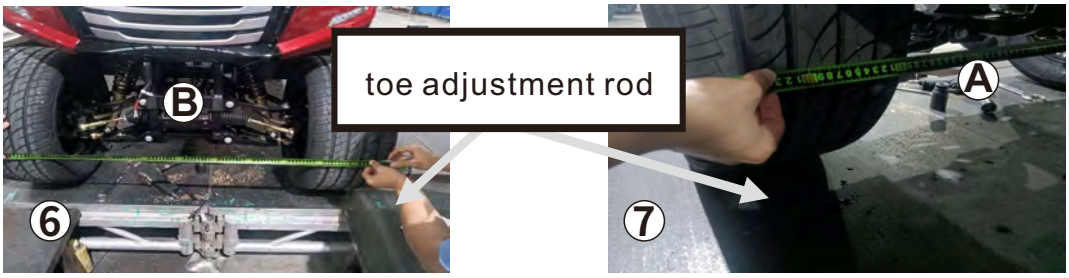

Be familiar with vehicle features before attempting any operations.

Refer to Figures 8 and 9. Work with a partner to use a tape measure to measure and record the distances A and B between the green points at the front and rear of the front wheels. The value of A-B is the toe value. For golf cart road tires, the correct range is 0mm ≤ A-B ≤ 3mm. If it exceeds this range, adjustments are needed.

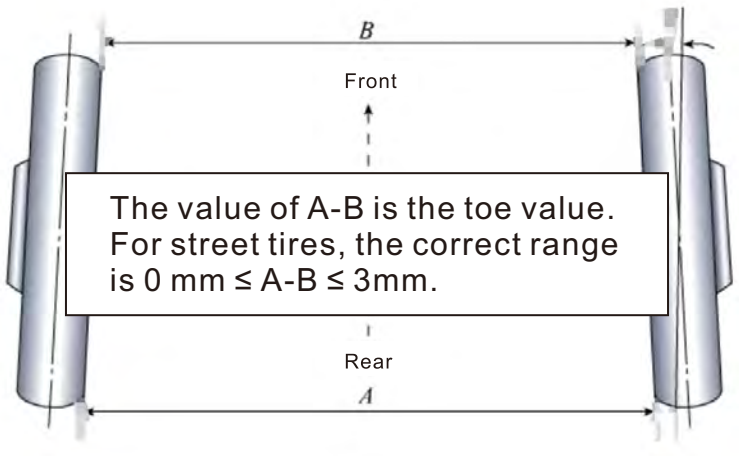

Refer to Figures 8 and 9. Use 17mm and 19mm open-end wrenches to adjust the tie rods at both ends of the steering rack. Adjust the toe value by changing the length of the tie rods (adjusting the tie rod by one turn changes the toe value by approximately 1-2mm). Lengthening the tie rod on the driver's side or the passenger's side increases the toe value.

After completing the toe adjustment, turn the steering wheel fully to the left and right, then return it to the center position. Re-measure the value of A-B. If it falls within the range of 0mm to 3mm, make marks on the steering rack tie rods and lock nuts.

Self-Inspection Steps:

* Check and confirm the front and rear center distances of the front wheels (for 20-inch golf cart road tires, the correct toe value range is 1mm ≤ A-B ≤ 2mm).

* Check and confirm the camber of the wheel hub (for 12-inch rims, the acceptable camber range is 1mm ≤ D-C ≤ 3mm).

* Check and confirm that all measurements are marked with green paint.

Be familiar with vehicle features before attempting any operations.

CHASSIS MAINTENANCE

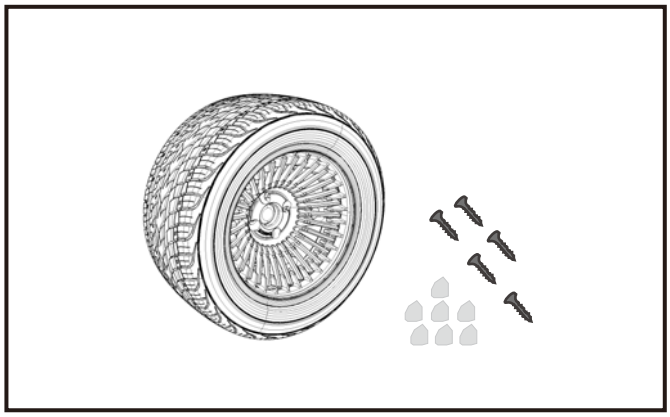

Tire Inspection and Care

- Before each use, inspect all tires for proper inflation and any visible damage.
- Remove any foreign objects (such as stones, nails, or metal debris) from the tire tread.
- Maintain tire pressure at the specified level. Incorrect pressure may cause uneven wear, affect handling, and reduce vehicle range.
- A flat or under-inflated tire can lead to unstable vehicle operation.

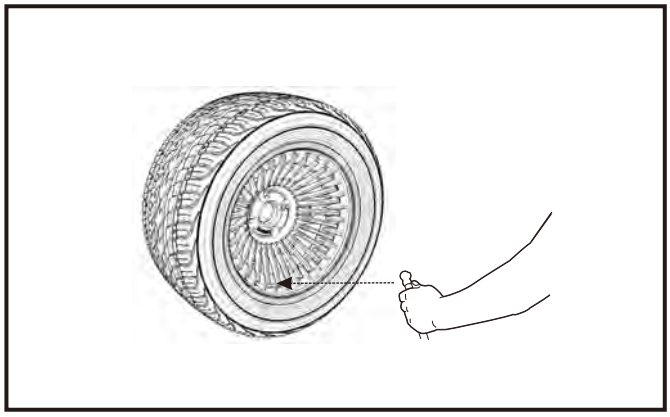

Lubrication of Mechanical Joints

- Apply lubricant to mechanical joint components monthly to ensure smooth steering and reliable operation.
- This helps maintain optimal turning performance and extends the life of moving parts.

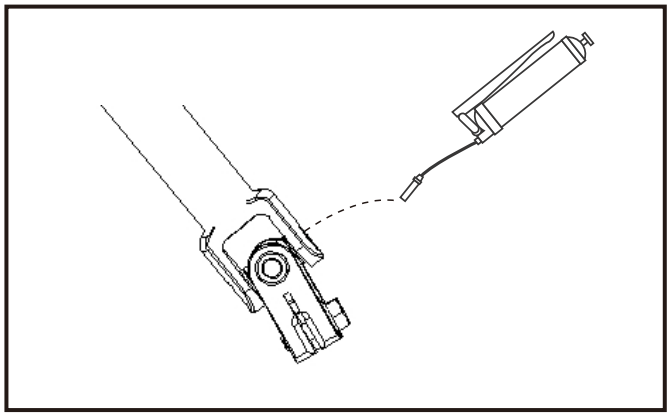

Steering Gear Box Protection

- Inspect the dust-proof covers on the steering gear box regularly.
- Ensure the covers are securely fastened at both ends.
- Loose covers may allow water and dust to enter, leading to internal corrosion and gear damage.

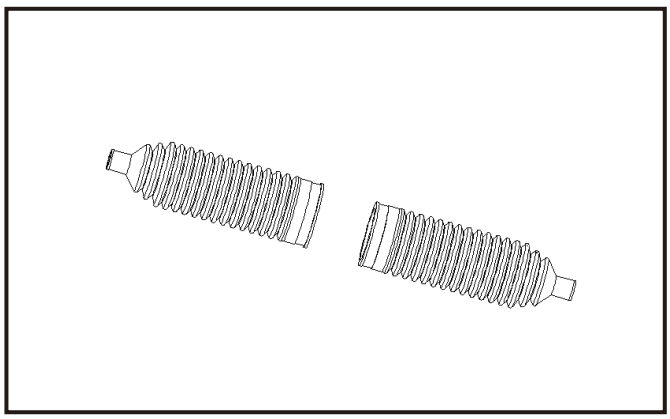

Be familiar with vehicle features before attempting any operations.

VEHICLE MAINTENANCE

⚠ WARNING

Cleaning Guidelines

・**General Cleaning**:
Use only commercially available automotive cleaners with a sponge or soft cloth. A garden hose at normal residential water pressure is sufficient.

・**Aluminum Parts**:
Use a commercially available aluminum cleaner paste and fine-grade (No. 00) steel wool to remove oxidation or discoloration.

・**Exterior Protection**:
Use non-abrasive wax products. Remove fertilizers, asphalt, creosote, paint, or chewing gum immediately to prevent staining.

・**Seat Cleaning**:
Clean seats with a solution of 10% liquid soap and warm water using a soft cloth. Use a soft bristle brush to remove embedded dirt. Aggressive cleaners can cause the seat to peel.

・**Windshield Cleaning**:
Clean the windshield with mild soapy water and a micro-fiber cloth to avoid scratches. Avoid glass cleaners or paper towels, as they may scratch or scuff the surface.

VEHICLE STORAGE PROCEDURE

PRE-STORAGE PREPARATION

Temperature & Shelter Requirements
Store the vehicle in a dry, ventilated shelter. The recommended ambient temperature range is 14°F to 95°F (-10°C to 35°C). Do not exceed the maximum storage temperature of 122°F (50°C).

Ignition & Security
・Place the vehicle in “**Park**” mode before shutdown.
・Turn off the vehicle using the **Start/Stop button**.
・Remove the **Key Fob** from the vehicle to prevent unintended activation.

Power Management
・Turn off all electrical **accessories** to prevent battery discharge.

VEHICLE MAINTENANCE

Be familiar with vehicle features before attempting any operations.

Scheduled Maintenance
- Perform all **semi-annual lubrication tasks** as outlined in the maintenance schedule.

Cleaning Procedure
- Thoroughly clean the **front body, rear body, seats, battery compartment**, and **vehicle underside**.

Parking Brake & Securing
- Do **not** engage the electromagnetic parking brake.
- Use **wheel chocks** or similar devices to prevent vehicle movement.
- Disengaging the parking brake prevents battery drain and potential brake system damage during long-term storage.

Tire Inflation
- Check and adjust tire pressure to the **standard pressure** indicated on the tire sidewall.

Final Inspection
- Confirm that the vehicle has been completely cleaned, with attention to the front/rear body, seats, battery compartment, and underside.

RETURNING VEHICLE TO SERVICE

1. Battery Charging
Fully recharge the battery before use.

2. Gear Selector Position
Rotate the Directional Control (FNR) to the Neutral (N) position.

3. Tire Pressure Check
Inflate all tires to the recommended pressure specified in the owner's manual.

4. Lubrication Service
Have a certified technician perform lubrication according to the service schedule.

5. Pre-Operation Safety Check
Complete the daily Pre-Operation Safety Checklist.

6. Operational Inspection
Conduct a full Vehicle Performance Inspection to ensure all systems are functional.

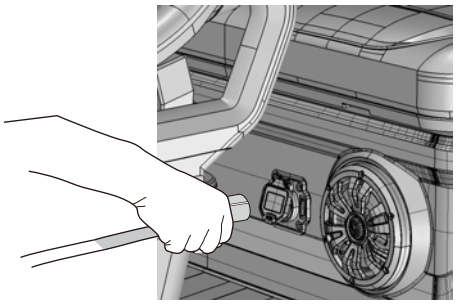

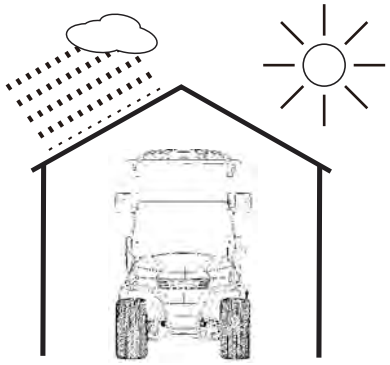

Be familiar with vehicle features before attempting any operations.

VEHICLE TRANSPORTATION AND TOWING

⚠ WARNING

DO NOT RIDE ON OR ALLOW OTHER PEOPLE ON A VEHICLE BEING TRANSPORTED ON A TRAILER OR BEING TOWED WITH ANOTHER VEHICLE.
DO NOT CARRY PASSENGERS ON GOLF CART WHILE TOWING THE VEHICLE.
APPLY BRAKE TO LIMIT SPEED WHEN TOW THE GOLF CART ON UNEVEN TERRAIN.
TURN ON THE HAZARD LIGHTS IF VEHICLE WAS CONFIGURED WITH.
APPLY BRAKE TO LIMIT SPEED WHEN COMMIT SHARP TURNS.
SECURE THE SEATS/WHINSHIELD /OTHER LOOSE ITEMS BEFORE TOWING GOLF CART.
DO NOT TOW MULTIPLE GOLF CARTS IN SERIES FORMATION.
DO NOT TOW THE GOLF CART ON HIGHWAY ROADS.
ABORT TOWING WHEN ABNORMAL PHENOMENONS BEING DETECTED.

The following steps can help you to tow an ICON golf cart safely without any damage.

Turn off key switch.
Keep the Forward/Reverse switch in a neutral position.
If you need to tow the golf cart for long distance ,remove the battery connections from battery pack terminals. This is done to ensure that the Rear axle/Motor/Controller/Batteries do not get damaged during the towing process.
Move the golf cart at a slower speed (Optimally Between 5-15MPH)or the same speed that you would generally move it if it has power. Exceeding the speed limit can over-spin themotor and ruin it.
Pulling your golf cart faster than designed to go can over-spin the motor. Possible slinging the internal parts into pieces and ruining the motor.
Unlock the EM brake on your golf cart motor, make sure to unlock it mechanically before towing the golf cart.

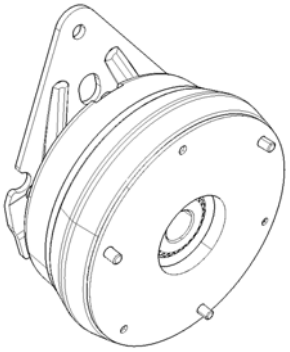

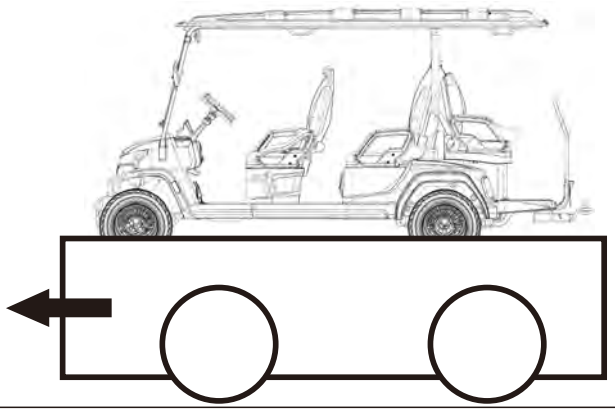

Be familiar with vehicle features before attempting any operations.

Guidelines for Using the Electromagnetic Parking Brake Handle

The standard electromagnetic parking brake does not require this handle.
We designed this handle as a tool for users to conveniently release the electromagnetic parking brake when the battery is depleted.



1.As shown in the image, hold the handle with your hand.



2.Press the top button down with your thumb.

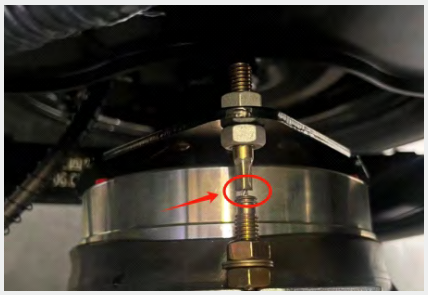

3.Observe the arrow; when the stopper block disengages from the gear, you can pull the handle upwards with your four fingers.



4.Observe the gap at the arrow on the motor's rear; it should be ≤2mm.

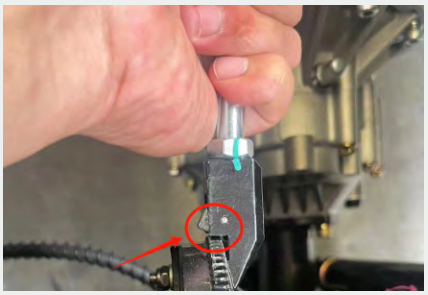

5.First, release your thumb, then release your palm. At this point, the handle will self-lock, and the vehicle can be pushed.

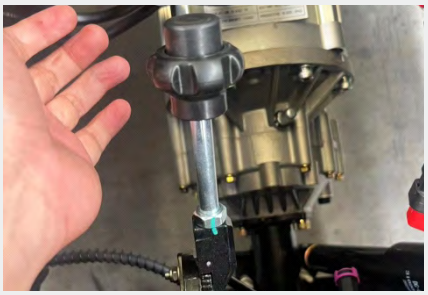

6.As shown in the image, gently pull the handle upwards, press the top, and slowly lower your palm to release the handle to the lowest point. The electromagnetic parking brake will return to normal.

VEHICLE MAINTENANCE

Be familiar with vehicle features before attempting any operations.

VEHICLE GENERAL SPECIFICATIONS

i20X

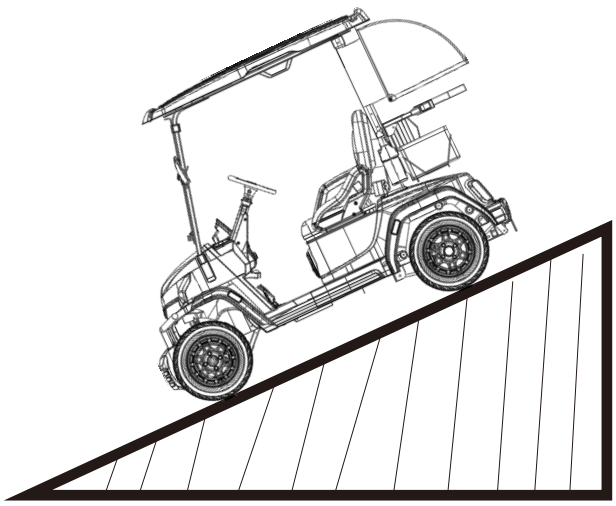

Recommended Max Ramp
30%

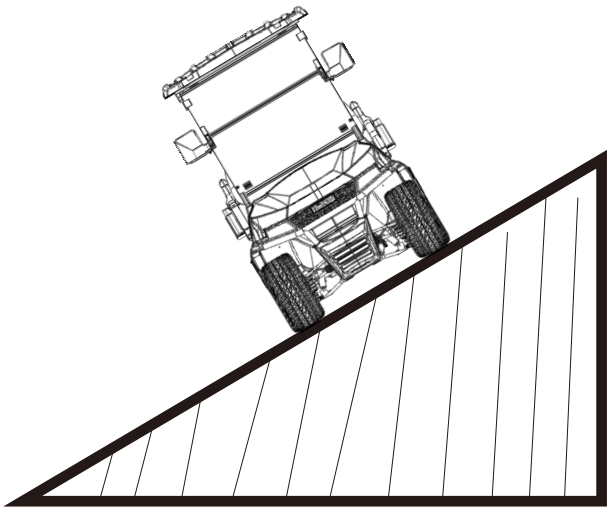

Recommended Max Side Tilt
21.8°

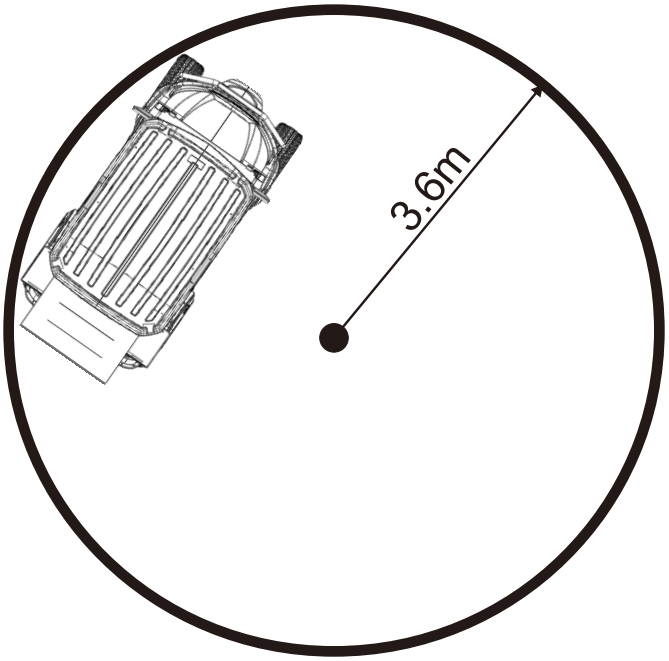

Minimum turning radius
≤3.6M

VEHICLE MAINTENANCE

Be familiar with vehicle features before attempting any operations.

VEHICLE GENERAL SPECIFICATIONS

i40X

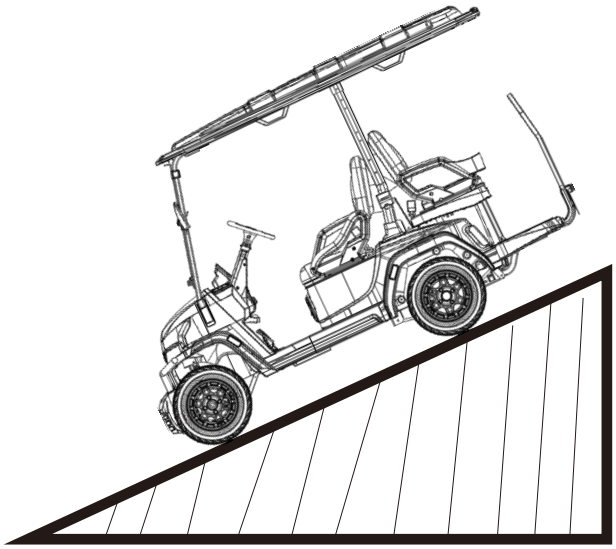

Recommended Max Ramp
15%

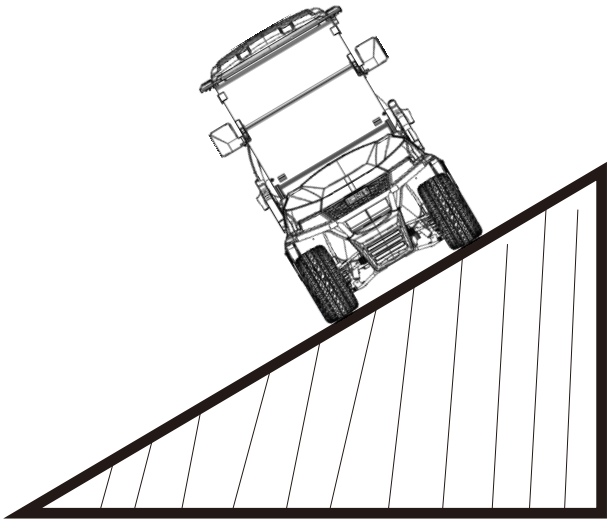

Recommended Max Side Tilt
21.8°

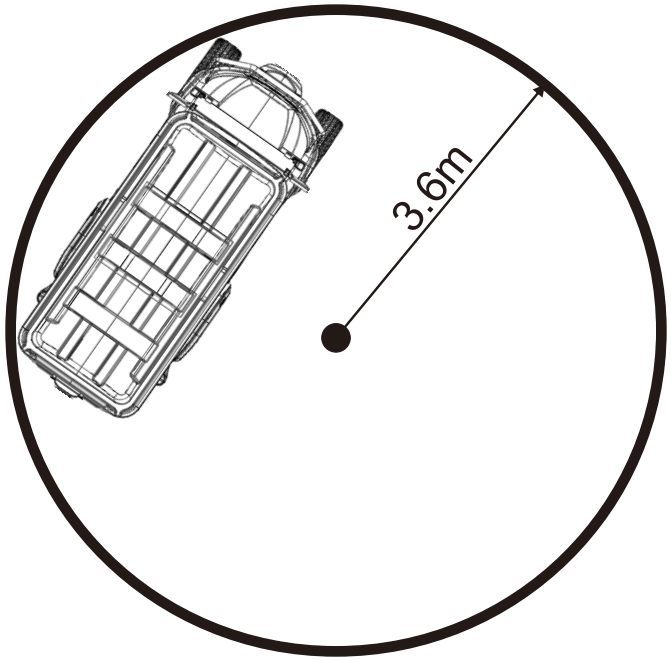

Minimum turning radius
≤3.6M

VEHICLE MAINTENANCE

Be familiar with vehicle features before attempting any operations.

VEHICLE GENERAL SPECIFICATIONS

i40FX

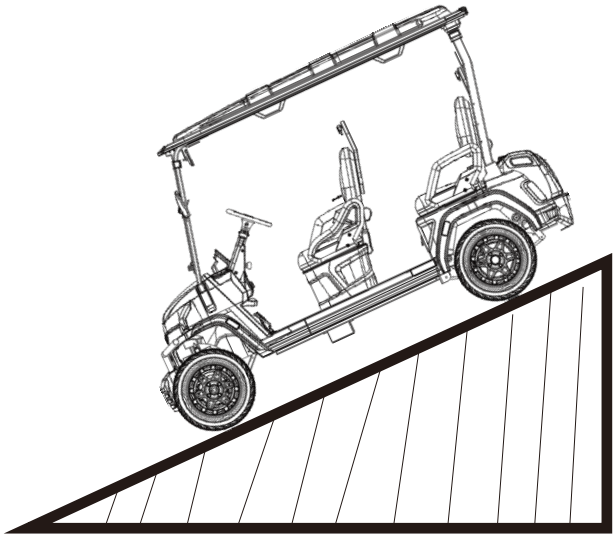

Recommended Max Ramp
15%

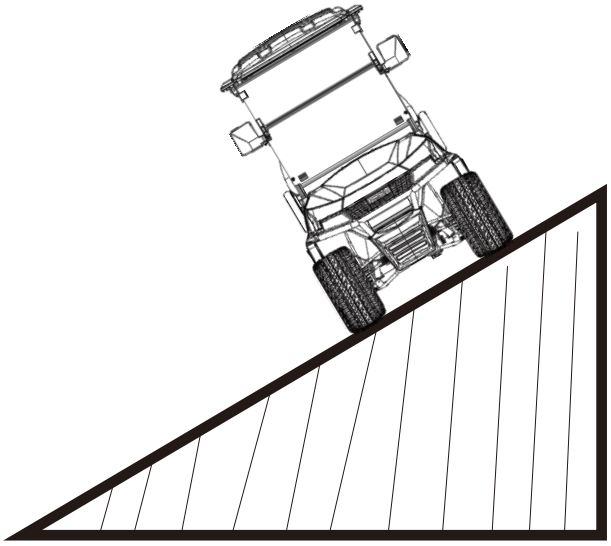

Recommended Max Side Tilt
21.8°

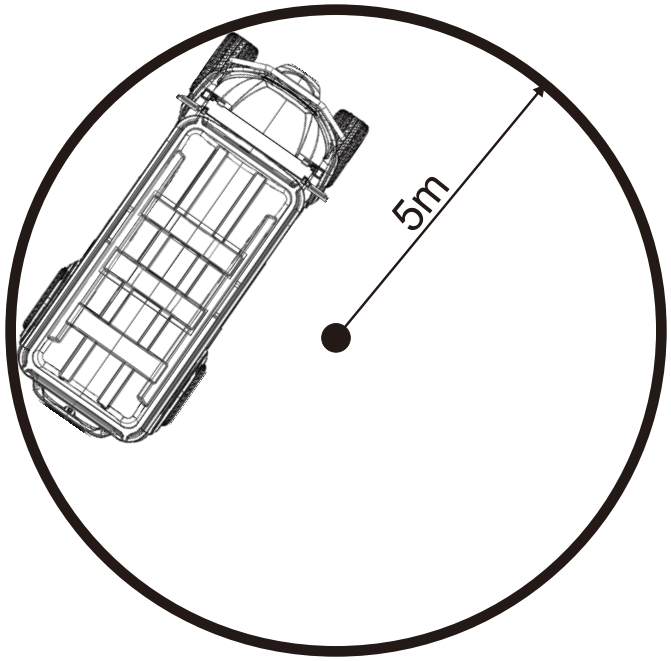

Minimum turning radius
⩽5M

VEHICLE MAINTENANCE

Be familiar with vehicle features before attempting any operations.

VEHICLE GENERAL SPECIFICATIONS

i60LX

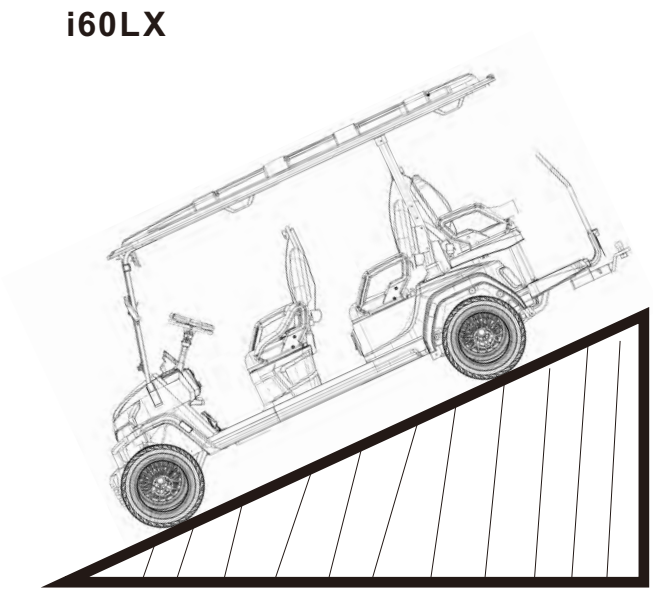

Recommended Max Ramp
20%

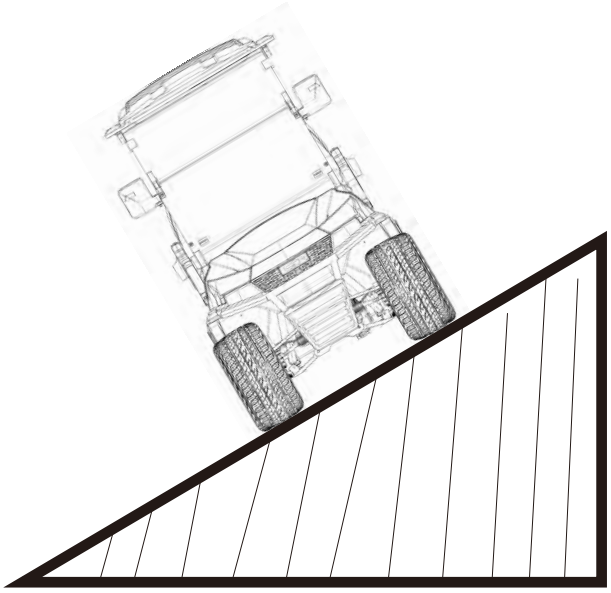

Recommended Max Side Tilt
21.8°

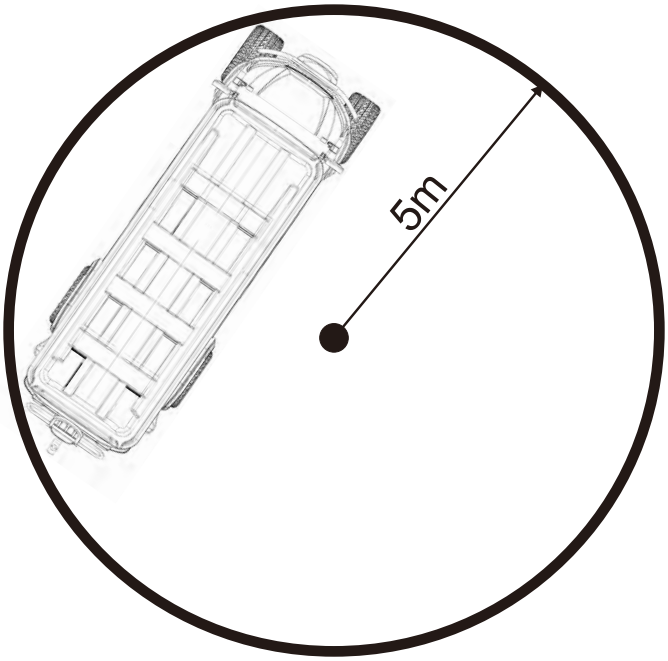

Minimum turning radius
⩽5M

VEHICLE MAINTENANCE

Be familiar with vehicle features before attempting any operations.

VEHICLE GENERAL SPECIFICATIONS

i20sX

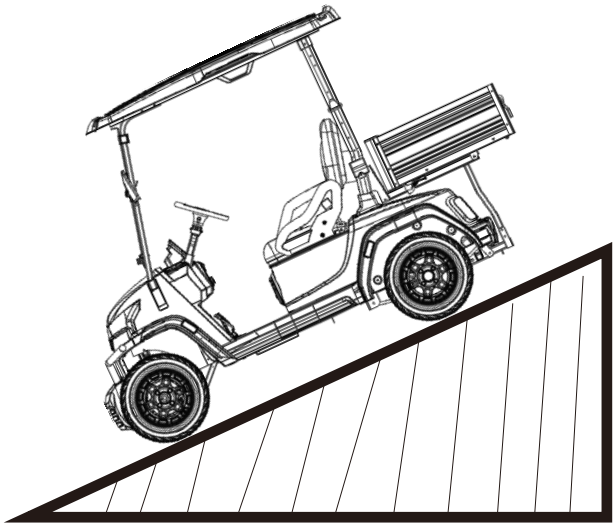

Recommended Max Ramp
Empty Load: 25% / Full Load: 20%

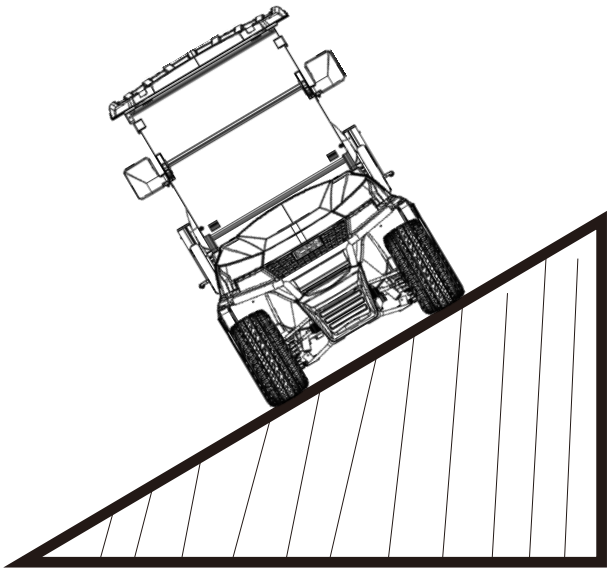

Recommended Max Side Tilt
21.8°

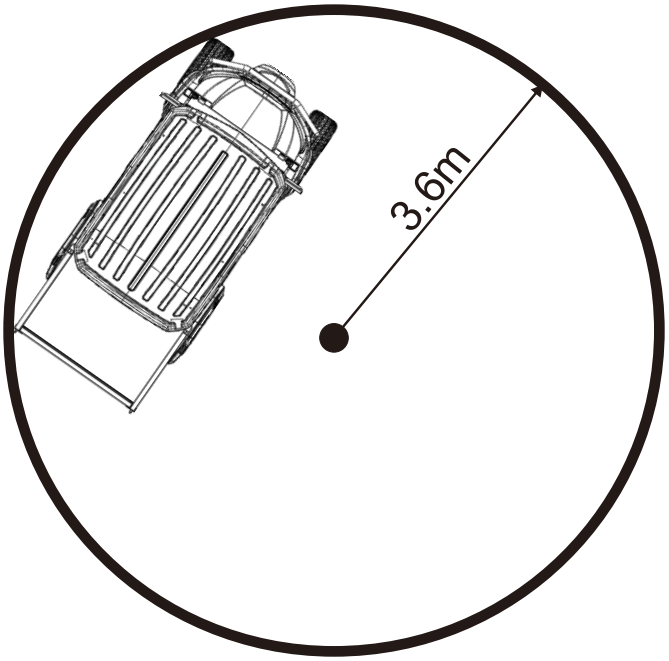

Minimum turning radius
⩽3.6M

VEHICLE MAINTENANCE

Be familiar with vehicle features before attempting any operations.

VEHICLE GENERAL SPECIFICATIONS

i20uX

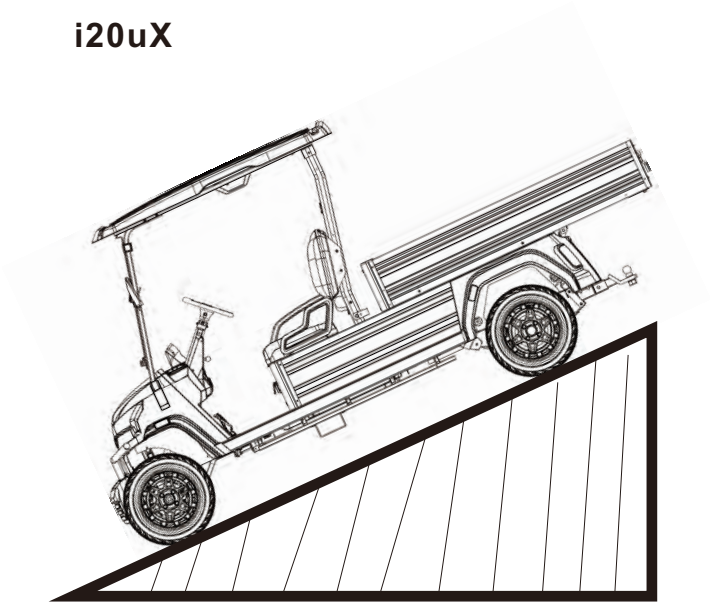

Recommended Max Ramp
25%

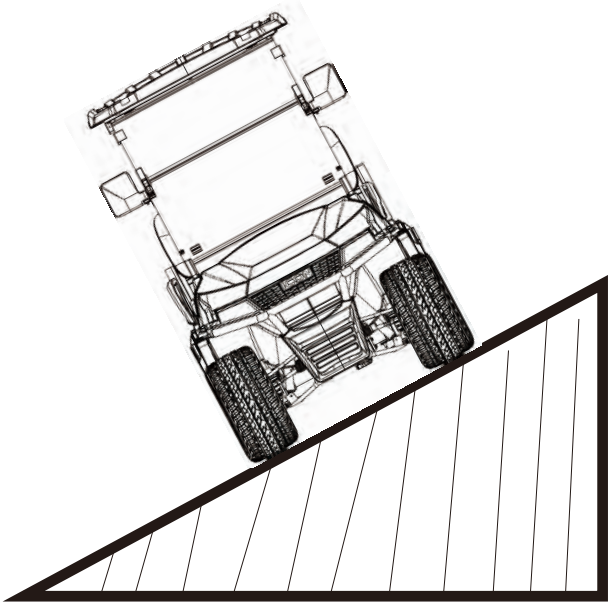

Recommended Max Side Tilt
21.8°

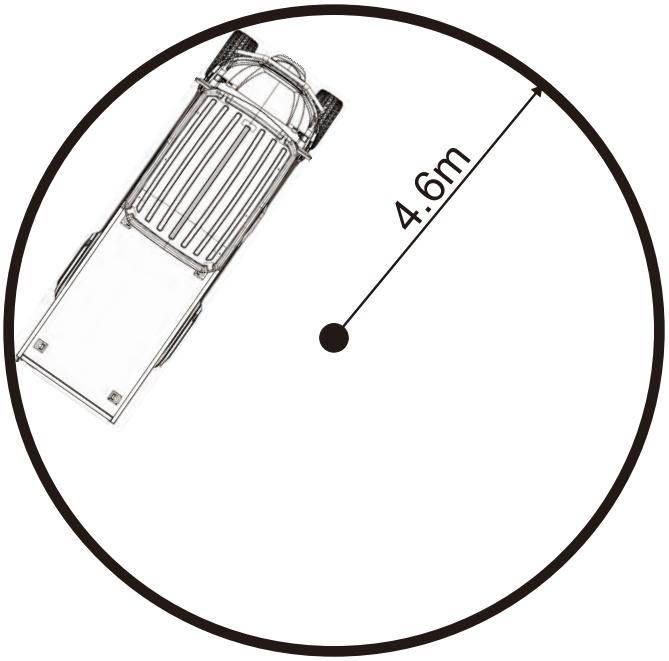

Minimum turning radius
⩽4.6M

VEHICLE MAINTENANCE

Be familiar with vehicle features before attempting any operations.

VEHICLE GENERAL SPECIFICATIONS

i20uX-F

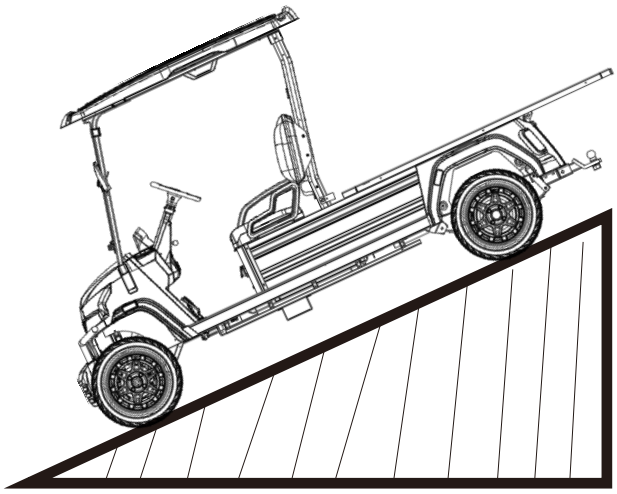

Recommended Max Ramp
25%

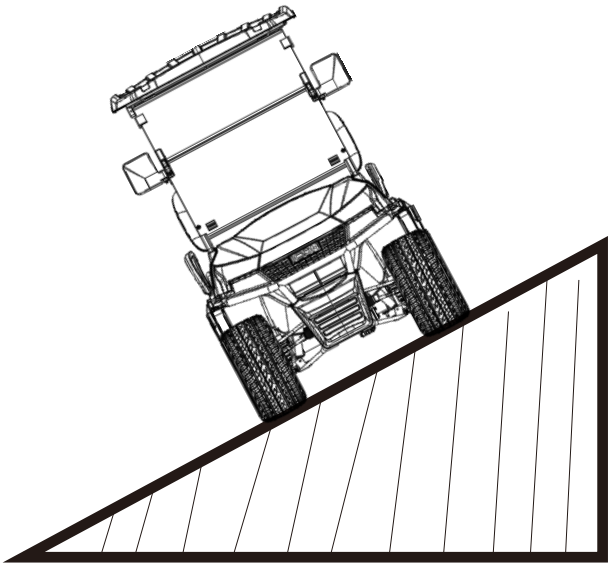

Recommended Max Side Tilt
21.8°

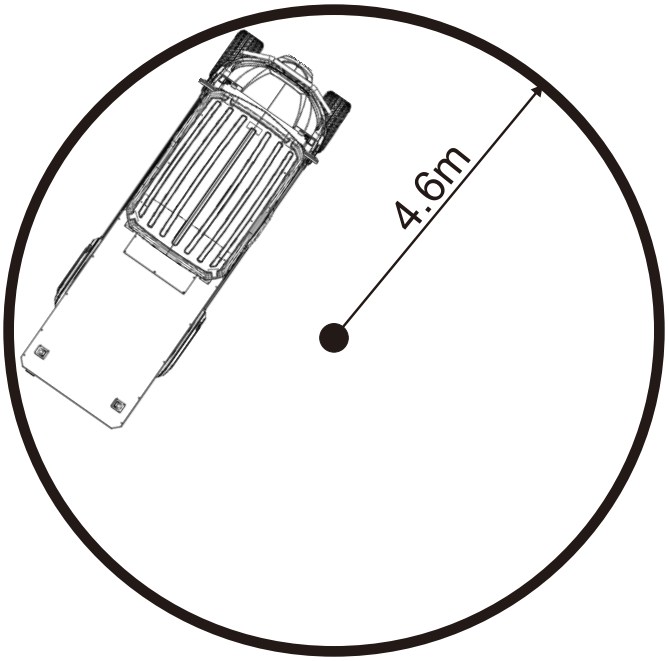

Minimum turning radius
⩽4.6M

MAINTENANCE LOG

Read all the safety statements carefully before attempting any procedure.

ICON
ELECTRIC VEHICLES

USER MANUAL

SCAN TO DOWNLOAD